Catalogue

Hall Effect Sensor ICs and Elements

Copyright© 2021, ChenYang Technologies GmbH & Co. KG

All rights reserved. No part of this catalogue may be reproduced,
stored in a retrieval system or transmitted in any form or by any means,
electronic, mechanical, photocopying, recording or otherwise,
without the prior permission of the copyright holder.

Contact Address:

Markt Schwabener Str. 8
D-85464 Finsing
Germany

Tel: +49 (0)8121-2574100
Fax: +49 (0)8121-2574101
Email: info@chenyang.de
http://www.chenyang.de

Content

Linear Hall Effect Sensor ICs 3
CYL840X Linear Hall Effect Sensor ICs 3
CYL3503 Linear Hall Effect Sensor IC 6
CYL49E Linear Hall Effect Sensor IC 9
CYL49F Linear Hall Effect Sensor IC 12
CYLF50 Linear Hall Effect Sensor IC 15

Linear Hall Effect Sensors (Elements) 19
CYSJ2A Linear Hall Effect Sensor 19
CYSJ3A Linear Hall Effect Sensor 24
CYSJ15A Linear Hall Effect Sensor 29
CYSJ106C and CYSJ166A GaAs HALL-EFFECT ELEMENTS 35
CYSJ302C GaAs Hall Effect Element 41
CYSJ362A GaAs HALL-EFFECT ELEMENTS 45
CYTHS124 GaAs HALL-EFFECT ELEMENTS 49
CYSJ902 GaAs Hall Effect Element 52

InSb Hall Effect Elements (Analog Output) 60
CYSH12AF HALL-EFFECT ELEMENT 60
CYTY300B (InSb) HALL-EFFECT ELEMENT 67
CYTY101A InSb Hall Effect Element 71
CYTY108A (InSb) HALL-EFFECT ELEMENT 78
CYTY105A InSb Hall Effect Element 85
CYTY322B InSb Hall Effect Element 91
CYTY922B InSb Hall Effect Element 96

Linear Hall Effect Sensor ICs

CYL840X Linear Hall Effect Sensor ICs

The CYL840X Series are high performance small versatile linear Hall Effect devices which are operated by the magnetic field from a permanent magnet or an electromagnet. The ratio metric output voltage is set by the supply voltage and varies in proportion to the strength of the magnetic field. The CYL840X family has a quiescent output voltage that is 50% of the supply voltage and output sensitivity options of 3.125mV/G and 5mV/G. The integrated circuitry provides increased temperature stability and sensitivity. The CYL840X provides high accuracy and temperature compensation. These linear position sensors have an operating temperature range of -40°C to +125°C, appropriate for industrial and automotive environments. They respond to either positive or negative magnetic field, monitoring either or both magnetic poles.

Features

- 3.5 to 30 V operation
- Single current sourcing or current sinking output
- Precise sensitivity and temperature compensation
- Power consumption of 4.5mA at 5 VDC for energy efficiency
- Output voltage proportional to magnetic flux density
- Temperature range of -40°C to 125°C
- Ratiometric rail-to-rail output
- Robust EMC protection
- 3 pin in-line PCB terminals

Applications

- Current sensing
- Position sensing
- Magnetic code reading
- Motor control
- Weight and liquid level sensing
- Motion detection
- Proximity detection
- Speed detection

Functional Diagram

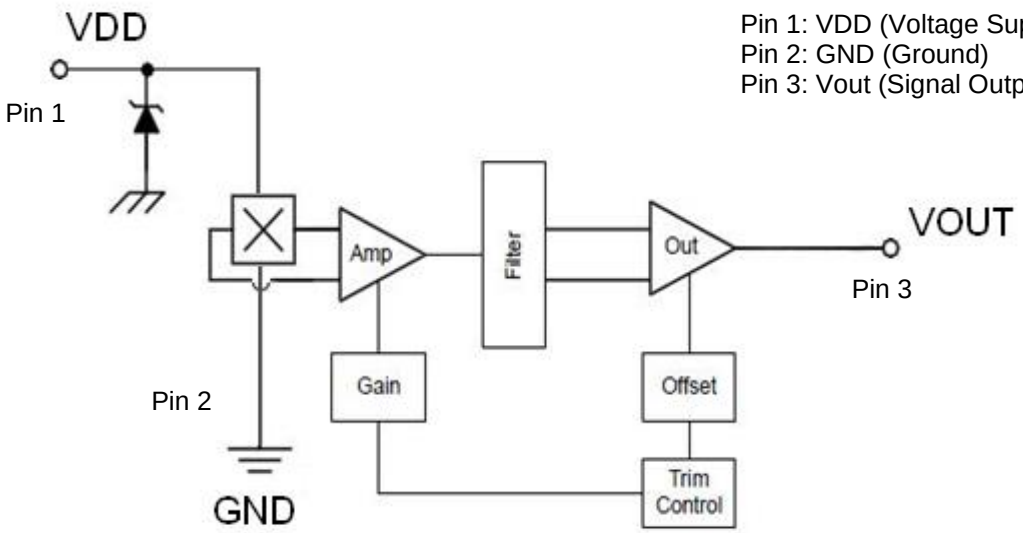

Pin 1: VDD (Voltage Supply)
Pin 2: GND (Ground)
Pin 3: Vout (Signal Output)

Markt Schwabener Str. 8
85464 Finsing
Germany

Tel.: +49 (0)8121-2574100
Fax: +49 (0)8121-2574101
Email: info@chenyang-gmbh.com
http://www.chenyang-gmbh.com

Transfer Characteristics at Vs=5.0VDC

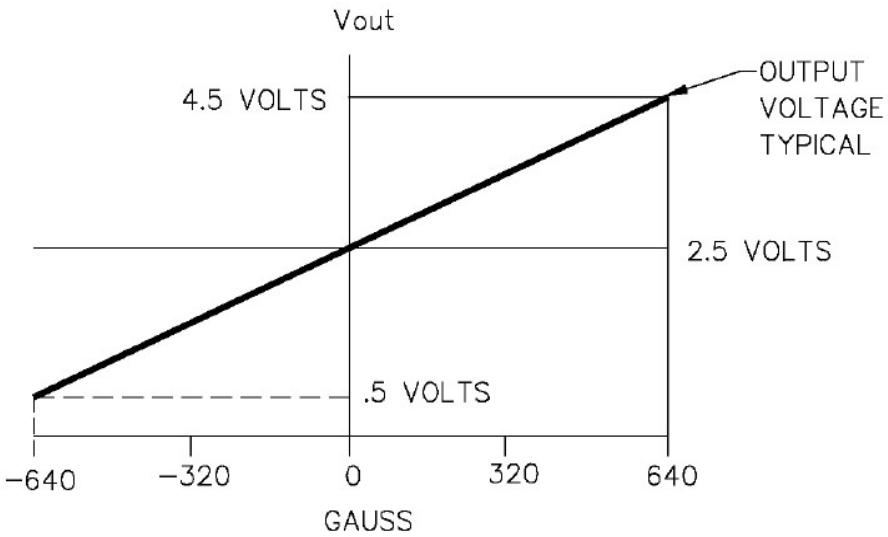

Absolute Maximum Ratings

Supply Voltage V_{DD}	35V
Supply Current I_{DD}	10mA
Output Sink Current, I_{OUT}	10mA
Power Dissipation, P_D	100mW
Operating Temperature Range, T_A	-40°C ~ +125°C
Storage Temperature Range, T_S	-65°C ~ +150°C
Maximum Junction Temperature, T_J	165°C

Electrical Specifications

DC Operating Parameters T_A = -40℃ to 150℃, V_{DD} = 3.5V to 30V (unless otherwise specified)

Parameter	Symbol	Test Conditions	Min	Typ	Max	Units
Supply Voltage	V_{DD}	Operating	3.5		30	V
Supply Current	I_{DD}	V_{DD} =5V, T_A=25°C		4.5		mA
Quiescent Voltage	V_{null}	B= 0, T_A =25°C, V_{DD} =5V	2.45	2.50	2.55	V
Output Voltage	V_H	B=+X		4.7		V
	V_L	B=-X		0.3		V
Output Source Current Limit	I_{out} (LMT)	B →0		-2.0		mA
Response time	t_r			5		µs
Frequency bandwidth (-3dB)	f_B		0	200	250	kHz

Magnetic Specifications

DC Operating Parameters T_A =25°C, V_{DD} = 5V (unless otherwise specified)

Parameter	Symbol	Part Name	Min	Typ	Max	Units
Sensitivity	Sens	CYL8402	24.5	25.00	25.5	mV/mT
		CYL8403	30.5	31.25	32.0	mV/mT
		CYL8405	49.0	50.0	51.0	mV/mT
Linearity	Lin	CYL840X Series			±1.0	%
Thermal drift of zero offset		CYL840X Series		300		ppm/°C
Delta V_{null} v.s. Temperature	V_{null} (T)	CYL840X Series			±2.0	%
Radiometry, V_{null}	V_{null} (V)	CYL840X Series			±2.0	%
Delta Sens V.s. Temperature	Sens (T)	CYL840X Series			±10	%

Dimensions

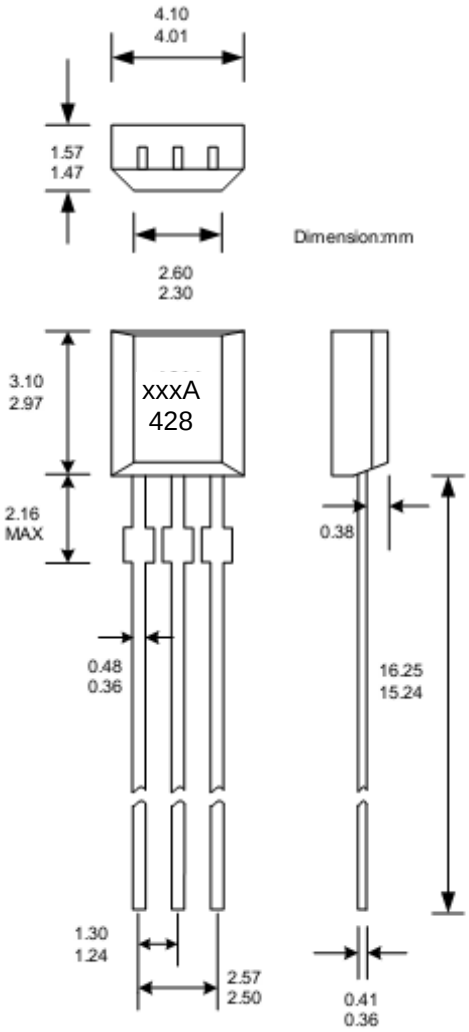

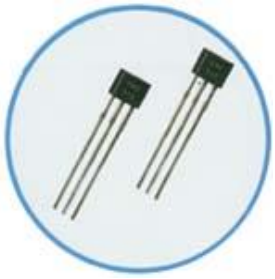

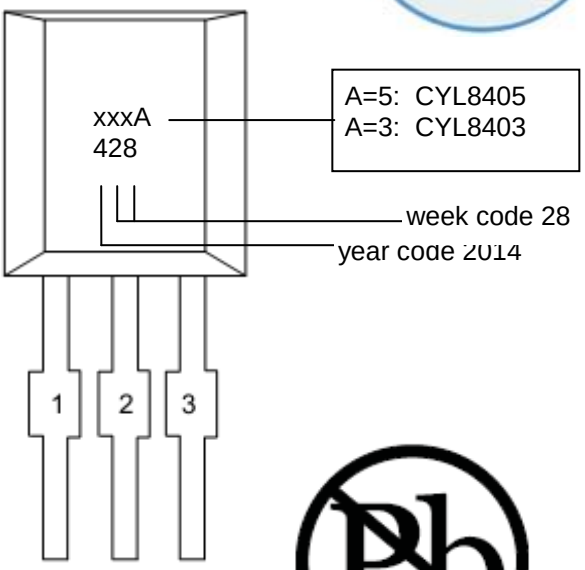

Pin 1: VDD (Voltage Supply)
Pin 2: GND (Ground)
Pin 3: Vout (Signal Output)

Markt Schwabener Str. 8
85464 Finsing
Germany

Tel.: +49 (0)8121-2574100
Fax: +49 (0)8121-2574101
Email: info@chenyang-gmbh.com
http://www.chenyang-gmbh.com

CYL3503 Linear Hall Effect Sensor IC

CYL3503 linear Hall-effect integrated circuit includes a voltage regulator, Hall-voltage generator, linear amplifier, and emitter-follower output stage. The output of the ICs changes linearly with the magnetic flux density of the input.

FEATURES

- Small Size
- High Accuracy
- High Sensitivity
- Excellent Reliability
- High Linearity

TYPICAL APPLICATION

- Motion Detector
- Gear Tooth Sensors
- Proximity Detector
- Current Detecting Sensor
- Velocity Detecting of Motor Bicycle

ABSOLUTE MAXIMUM RATINGS

Parameter	Symbol	Value	Unit
Supply Voltage	Vcc	2.7-8.0	V
Operating Temperature Range	T_A	-20~+85	°C
Storage Temperature Range	T_S	-65~+150	°C

FUNCTIONAL BLOCK DIAGRAM

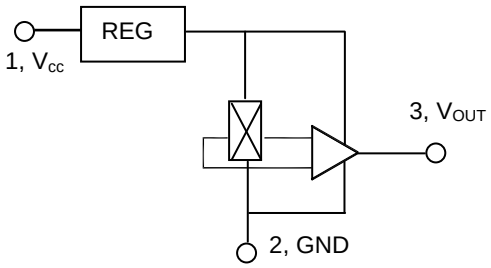

ELECTRICAL CHARACTERISTICS (T_A=25°C, Vcc=5.0V)

TYPE	Supply current Icc (mA)			Quiescent Output Voltage Vo(V)			Sensitivity S (mV/mT)			Output upper Limit Voltage V_T(V)B≥200mT			Output Lower Limit Voltage V_L(V)B≤-200mT		
	Min	Typ	Max	Min	Typ	Max	Min	Typ	Max	Min	Typ	Max	Min	Typ	Max
CYL3503	-	9.0	14.0	2.25	2.50	2.75	7.5	-	25.0	4.20	4.25	4.30	0.75	1.00	1.20

Connection

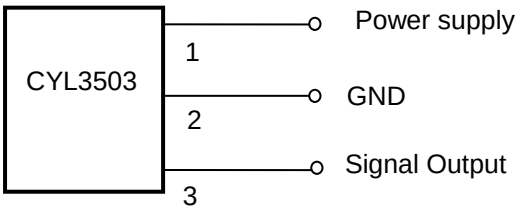

Markt Schwabener Str. 8
85464 Finsing
Germany

Tel.: +49 (0)8121-2574100
Fax: +49 (0)8121-2574101
Email: info@chenyang-gmbh.com
http://www.chenyang-gmbh.com

Package Outline Drawing (Unit: mm)

TO-92UA Package and Position of Sensitive Area

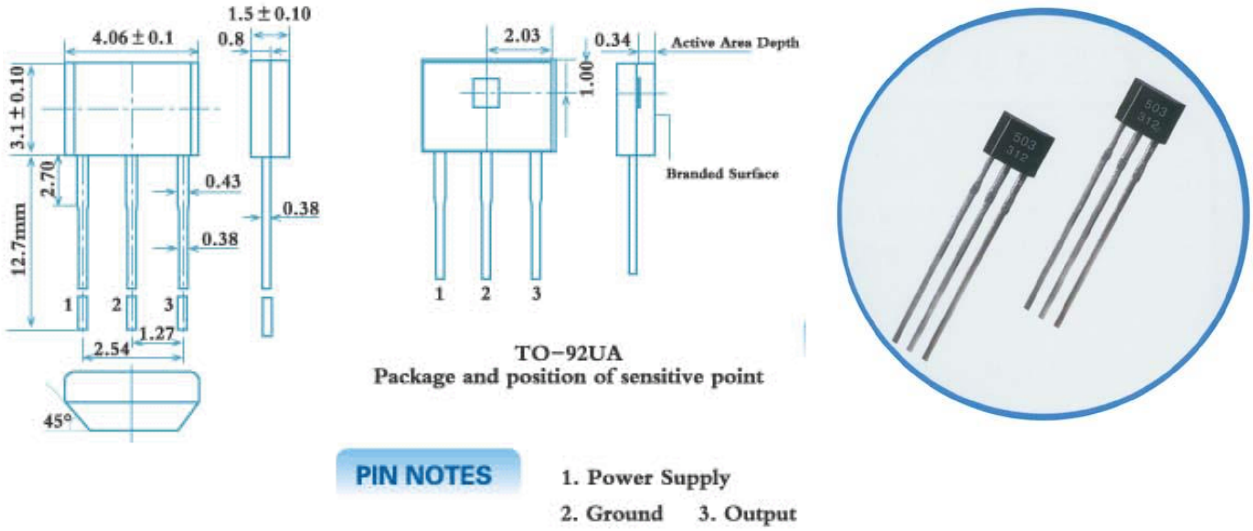

Note:

Mechanical stress should be lessened as far as possible in the process of assembly.
The soldering temperature at the leads should be less than 260°C with 5 seconds. If N pole is approaching Hall-effect ICs from the back side of the package, output voltage will increase, S pole is approaching ICs from the back side, output voltage will reduce; and if from the branded side of the package, the output situation is just to the contrary.

Characteristics Curves

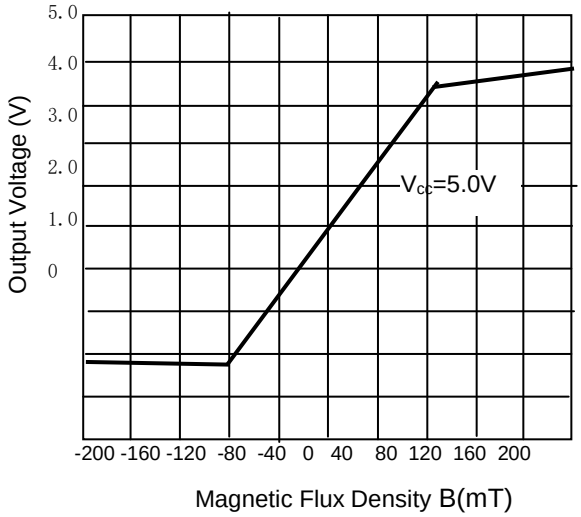

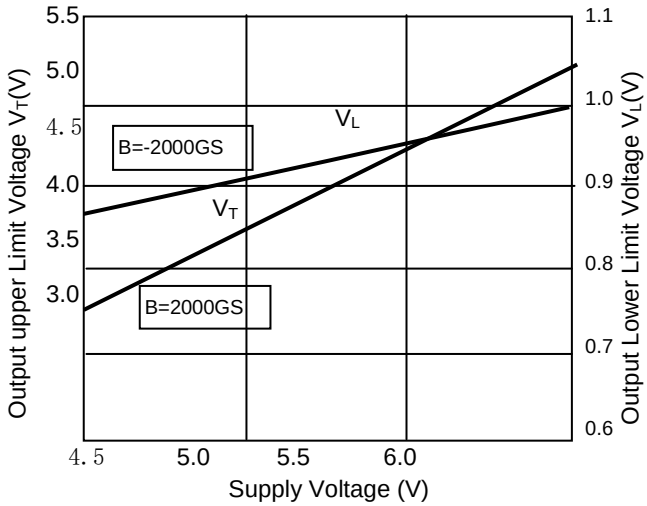

Markt Schwabener Str. 8
85464 Finsing
Germany

Tel.: +49 (0)8121-2574100
Fax: +49 (0)8121-2574101
Email: info@chenyang-gmbh.com
http://www.chenyang-gmbh.com

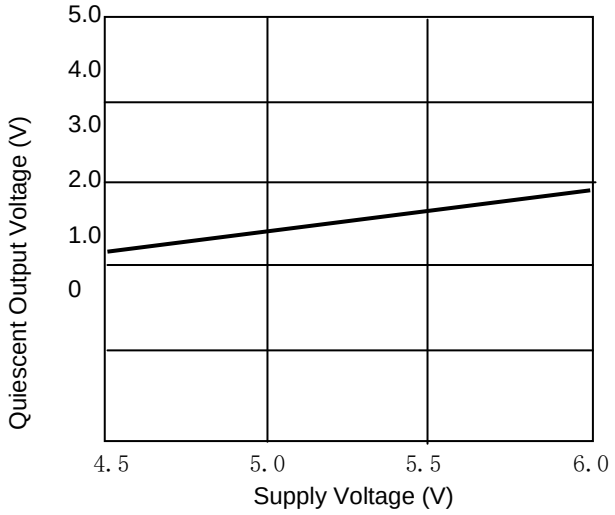

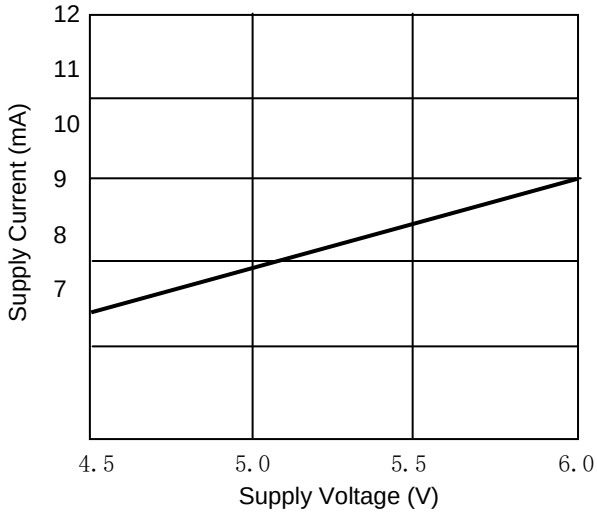

Principles

.

The quiescent output voltage (B=0mT) is nominally one-half the supply voltage. When a south magnetic pole presented to the branded face of the Hall-effect IC, it will drive the output higher than the quiescent voltage. A north magnetic pole will drive the output below the quiescent output voltage. In operation, instantaneous and proportional output voltage levels are dependent on magnetic flux density at the most sensitive area of the device. Greatest sensitivity is obtained with a supply voltage of 6V, but at the cost of increased supply current and a slight loss of output symmetry. The IC' output is usually capacitively coupled to an amplifier that boosts the output above the millivolt level.

Applications

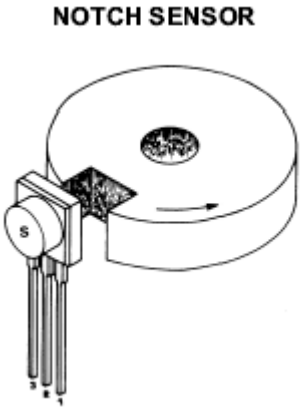

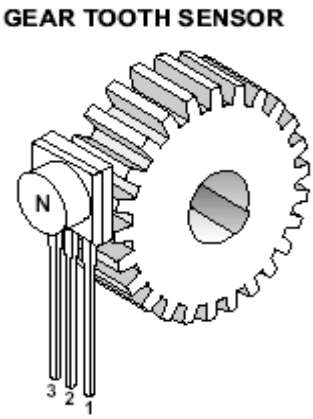

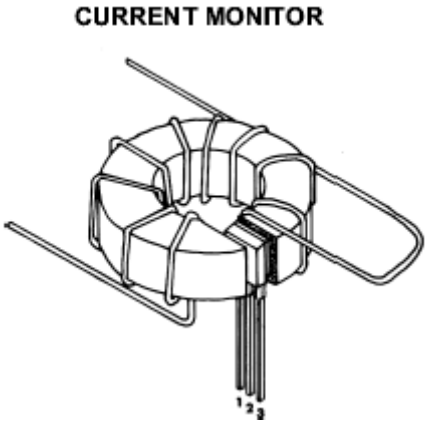

Markt Schwabener Str. 8
85464 Finsing
Germany

Tel.: +49 (0)8121-2574100
Fax: +49 (0)8121-2574101
Email: info@chenyang-gmbh.com
http://www.chenyang-gmbh.com

CYL49E Linear Hall Effect Sensor IC

CYL49E linear Hall-effect integrated circuit based on Hall-effect principle, includes a voltage regulator, Hall-voltage generator, linear amplifier, and emitter-follower output stage. The output of the ICs changes linearly with the magnetic flux density of the input.

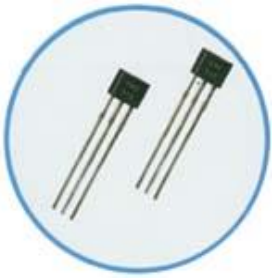

FEATURES

- Small Size
- High Accuracy
- High Sensitivity
- Excellent Reliability
- Low Power

TYPICAL APPLICATION

- Motion Detector
- Gear Tooth Sensors
- Proximity Detector
- Speed Regulator for Sports Appliance
- Current Detecting Sensor

FUNCTIONAL BLOCK DIAGRAM

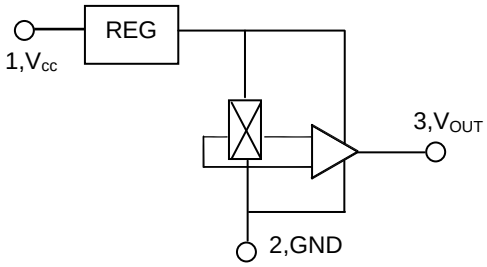

ABSOLUTE MAXIMUM RATINGS

Parameter	Symbol	Value	Unit
Supply Voltage	Vcc	2.7 -9.0	V
Operating Temperature Range	T_A	-40 ~ 85	°C
Storage Temperature Range	T_S	-50 ~150	°C

ELECTRICAL & MAGNETIC CHARACTERISTICS (T_A=25°C, Vcc=5.0V)

Supply current Icc(mA)	Output upper Limit Voltage V_T (V) B≥90mT	Output Lower Limit Voltage V_L (V) B≤-90mT	Quiescent Output Voltage Vo(V) B=0mT	Sensitivity S (mV/mT)	Operating Temperature Range (°C)	Output Function
≤8mA	≥4.20	≤1	2.5±0.1	14~18	-40~+85	Linear

Connection

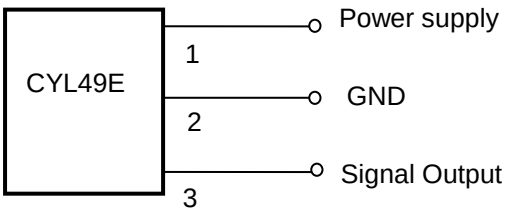

Markt Schwabener Str. 8
85464 Finsing
Germany

Tel.: +49 (0)8121-2574100
Fax: +49 (0)8121-2574101
Email: info@chenyang-gmbh.com
http://www.chenyang-gmbh.com

Characteristic Curves

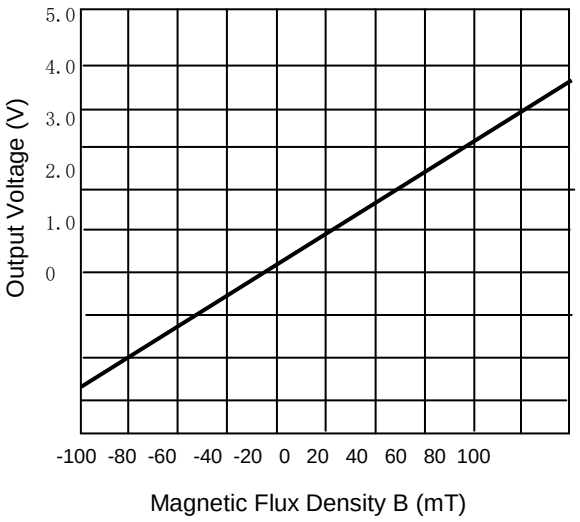

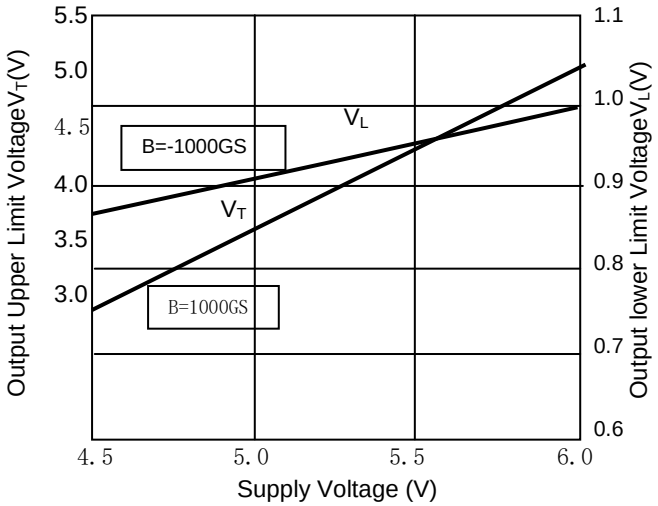

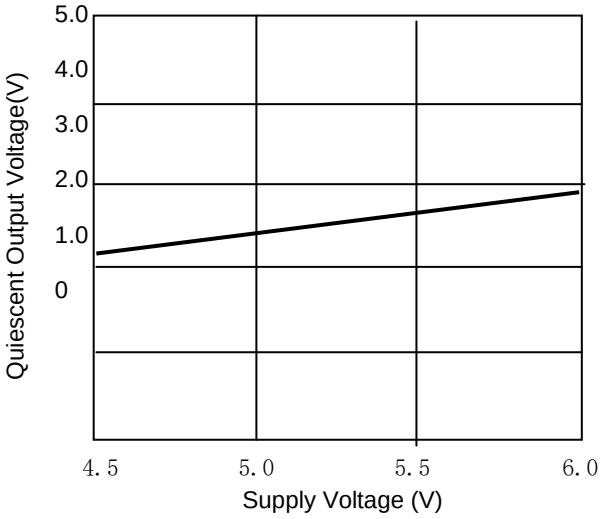

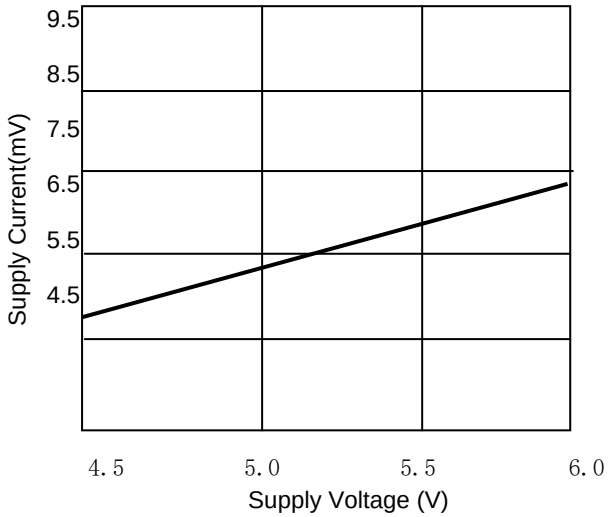

Principles

The quiescent output voltage (B=0mT) is nominally one-half the supply voltage. When a south magnetic pole presented to the branded face of the Hall-effect IC, it will drive the output higher than the quiescent voltage. A north magnetic pole will drive the output below the quiescent output voltage. In operation, instantaneous and proportional output voltage levels are dependent on magnetic flux density at the most sensitive area of the device. Improve the supply voltage can increase its sensitivity.

Package (Unit: mm)

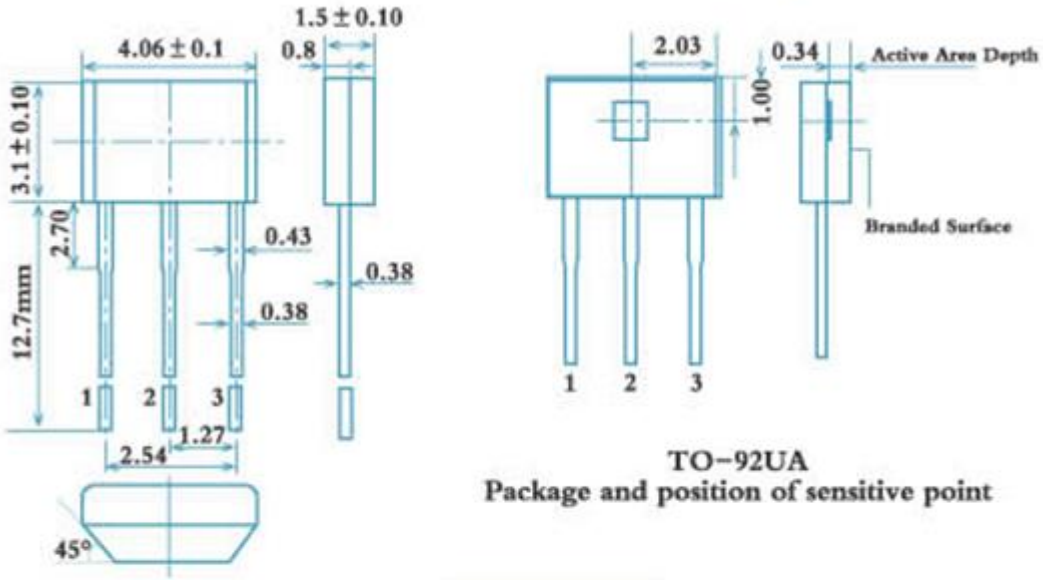

TO−92UA
Package and position of sensitive point

PIN NOTES

1. Power Supply
2. Ground 3. Output

Note:

- Mechanical Stress Should be lessened as far as possible in the process of assembly
- The soldering temperature at the leads should be less than 260°C with 5 seconds.
- If N pole is approaching hall-effect ICs from the back side of the package, output voltage will increase, S pole is approaching ICs from the back side, output voltage will reduce; and if from the branded side of the package, the output situation is just to the contrary.

CYL49F Linear Hall Effect Sensor IC

General Description

The CYL49F is a small, versatile linear Hall-effect device that is operated by the magnetic field from a permanent magnet or an electromagnet. The output voltage is set by the supply voltage and varies in proportion to the strength of the magnetic field. The integrated circuitry features low noise output, which makes it unnecessary to use external filtering. It also includes precision resistors to provide increased temperature stability and accuracy. The operating temperature range of this linear Hall sensor is -40°C to105°C, appropriate for commercial, consumer and industrial applications.

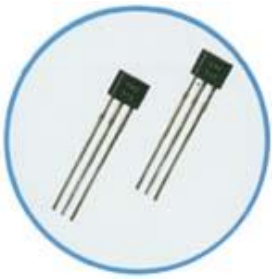

Features

- Miniature Construction
- Power Consumption of 3mA at Vcc=5V for Energy Efficiency
- Single Current Sourcing Output
- Linear Output for Circuit Design Flexibility
- Low Noise Output Virtually Eliminates the Need for Filtering
- A Stable and Accurate Output
- Temperature Range of -40℃ to 105℃
- Responds to Either Positive or Negative Magnetic Field
- The Maximum Instantaneous Supply Voltage up to 50V
- High ESD Rating: Human Body Model: 6000V, Machine Model: 600V

Typical applications

- Current Sensing
- Motor Control
- Position Sensing
- Magnetic Code Reading
- Ferrous Metal Detector
- Vibration Sensing
- Liquid Level Sensing
- Weight Sensing
- Pole Detection

Functional Block Diagram

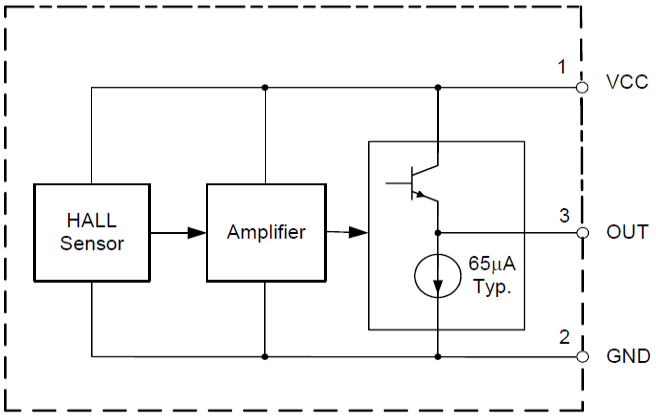

Markt Schwabener Str. 8
85464 Finsing
Germany

Tel.: +49 (0)8121-2574100
Fax: +49 (0)8121-2574101
Email: info@chenyang-gmbh.com
http://www.chenyang-gmbh.com

ABSOLUTE MAXIMUM RATINGS

Parameter	Symbol	Value	Unit
Supply Voltage	Vcc	2.7-10	V
Operating Temperature Range	T_A	-40 ~ 125	°C
Storage Temperature Range	T_S	-50 ~ 150	°C
ESD (Human Body Model)		6000	V
ESD (Machine Model)		600	V

Note: Stresses greater than those listed under "Absolute Maximum Ratings" may cause permanent damage to the device. These are stress ratings only. Functional operation of the device at these or any other conditions beyond those indicated under "Recommended Operating Conditions" is not implied. Exposure to "Absolute Maximum Ratings" for extended periods may affect device reliability.

Recommended Operating Conditions

Supply Voltage	$V_{CC:}$	3~8V
Operating Temperature Range	$T_{A:}$	-40~105°C

Electrical & Magnetic Characteristics (T_A=25°C, Vcc=5.0V)

Parameter	Symbol	Conditions	Min	Typ	Max	Unit
Supply Current	Icc		2	3	4	mA
Quiescent Output Voltage	Vo	@ B=0GS	2.25	2.5	2.75	V
Output Voltage Sensitivity	S	B=0 to ±600GS	1.7	2.0	2.4	mV/GS
Output Voltage Span	VOS		1.0 to (VCC-1.0)	0.8 to (VCC-0.8)		V
Output Resistor	Ro			60	120	Ω
Magnetic Field Range	B		±500	±800		GS
Linearity of Span				0.7		%
Output Noise		BW=10Hz to 10kHz		90		μV

Connection

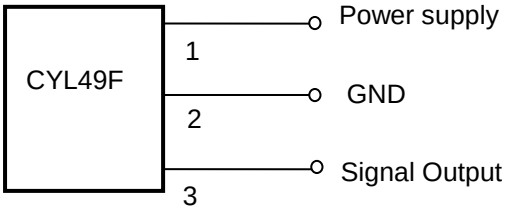

Markt Schwabener Str. 8
85464 Finsing
Germany

Tel.: +49 (0)8121-2574100
Fax: +49 (0)8121-2574101
Email: info@chenyang-gmbh.com
http://www.chenyang-gmbh.com

Package TO-92S (unit :mm)

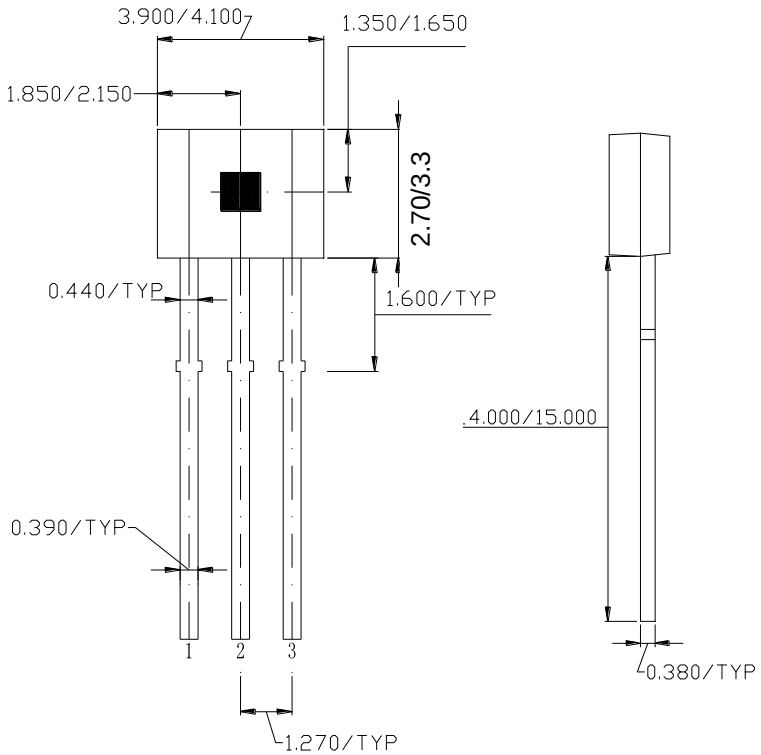

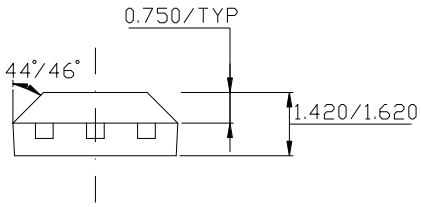

Pin Arrangement:

1. Vcc
2. GND
3. OUTPUT

Transfer Characteristics (VCC=5V)

When there is no outside magnetic field (B=0GS), the quiescent output voltage is one-half of the supply voltage in general. If a south magnetic pole approaches to the front face (the side with marking ID) of the Hall Effect sensor, the circuit will drive the output voltage higher. Contrary, a north magnetic pole will drive the output voltage lower. The variations of voltage level up or down are symmetrical. Greatest magnetic sensitivity is obtained with a supply voltage of 6V, but at the cost of increased supply current and a slight loss of output symmetry. So, it is not recommended to work in such condition unless the output voltage magnitude is a main issue. The output signal can be capacitively coupled to an amplifier for boosting further if the changing frequency of the magnetic field is high.

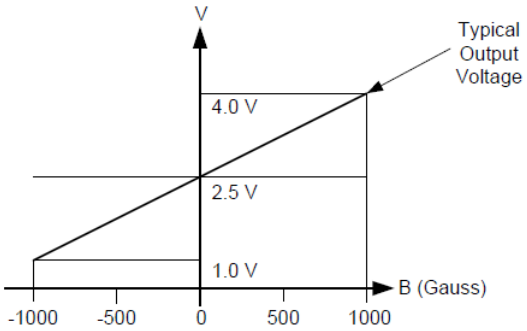

Note:

- Mechanical Stress Should be lessened as far as possible in the process of assembly
- The soldering temperature at the leads should be less than 260°C with 5 seconds.
- If N pole is approaching hall-effect ICs from the back side of the package, output voltage will increase, S pole is approaching ICs from the back side, output voltage will reduce; and if from the branded side of the package, the output situation is just to the contrary.

CYLF50 Linear Hall Effect Sensor IC

The CYLF50 Hall-effect sensors accurately track extremely small changes in magnetic flux density-changes generally too small to operate Hall-effect switches.
As motion detectors, gear tooth sensors, and proximity detectors, they are magnetically driven mirrors of mechanical events. As sensitive monitors of electromagnets, they can effectively measure a system's performance with negligible system loading while providing isolation from contaminated and electrically noisy environments.
Each Hall-effect integrated circuit includes a Hall sensing element, linear amplifier, and emitter-follower output stage. Problems associated with handling tiny analog signals are minimized by having the Hall cell and amplifier on a single chip.

Features

Very high sensitive	2.7V to 7V power supply
Flat response to 23 kHz	Package : SIP-3L
Lower low-noise output	

Block Diagram

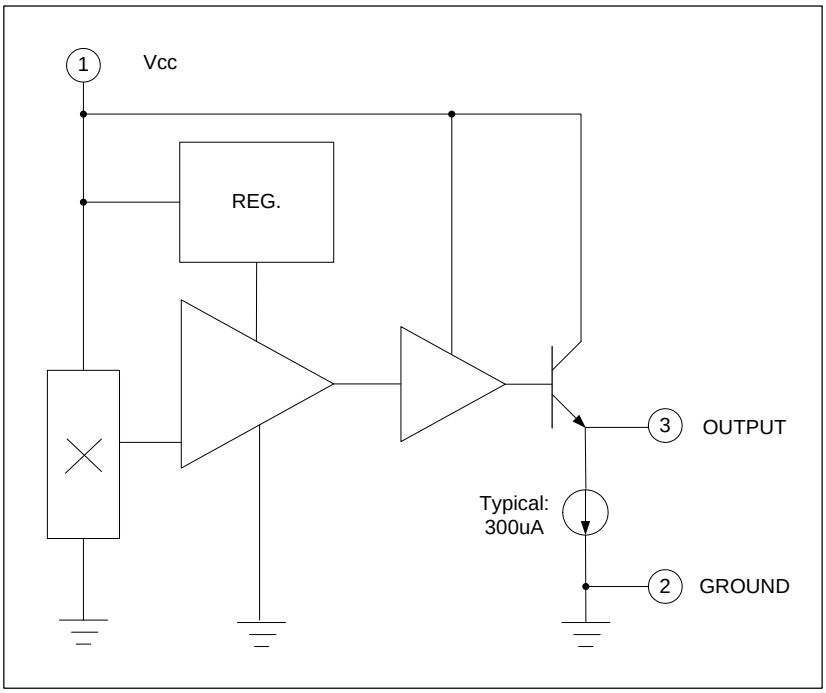

Figure.1

Recommended Operating Conditions

Parameter	Symbol	Conditions	Values			Unit
			Min.	Typ.	Max.	
Supply Voltage	V_{DD}	-	2.7		7.0	V
Operating Temperature Range	T_A	-	-20		85	℃

Markt Schwabener Str. 8
85464 Finsing
Germany

Tel.: +49 (0)8121-2574100
Fax: +49 (0)8121-2574101
Email: info@chenyang-gmbh.com
http://www.chenyang-gmbh.com

Absolute Maximum Ratings

Parameter	Symbol	Conditions	Values			Unit
			Min.	Typ.	Max.	
Operating Temperature	T_{OP}	-	-20		85	℃
Storage Temperature	T_{ST}	-	-55		165	℃
DC Supply Voltage	V_{DD}	-	2.7		7	V
Supply Current	I_{DD}	-			10	mA
Magnetic Flux Density	B	-			Unlimited	G
Junction temperature	T_J				160	℃
Lead Temperature		10sec			260	℃

Electrical Characteristics V_{DD}=5.0V, T_A=25℃ (unless otherwise specified)

Parameter	Symbol	Conditions	Values			Unit
			Min.	Typ.	Max.	
Average Supply Current(no load)	I_{DD}	-		6.0	10	mA
Quiescent Output Voltage	V_{OUT}	B=0G	2.35	2.50	2.65	V
Sensitivity	ΔV_{OUT}	B=0 G to ±900G	1.00	1.20	1.40	mV/G
Linearity (% of Span)				<0.7		%

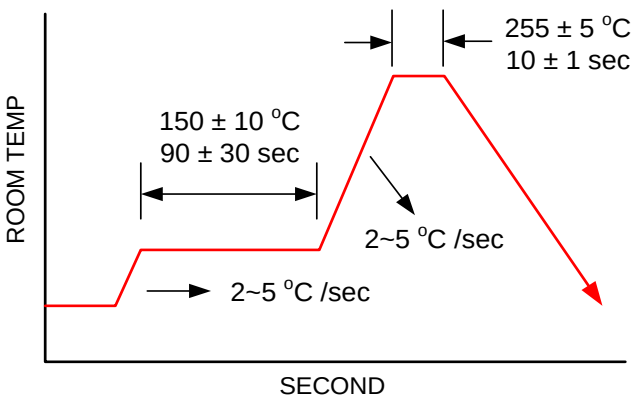

Soldering Condition

Figure 2

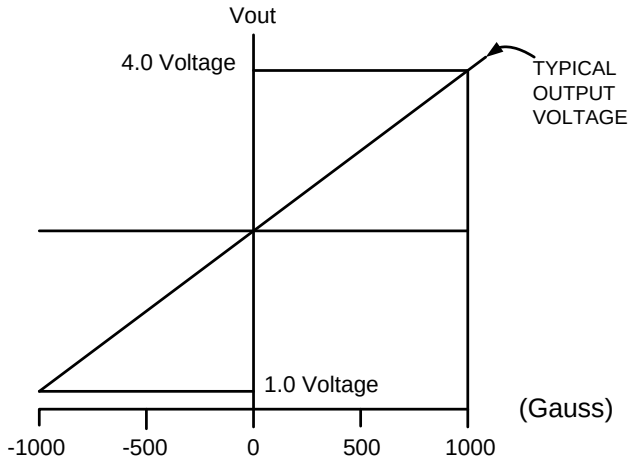

Figure 3 Transfer Characteristics (V_{DD}=5.0V)

Pin Connection

[Top View]

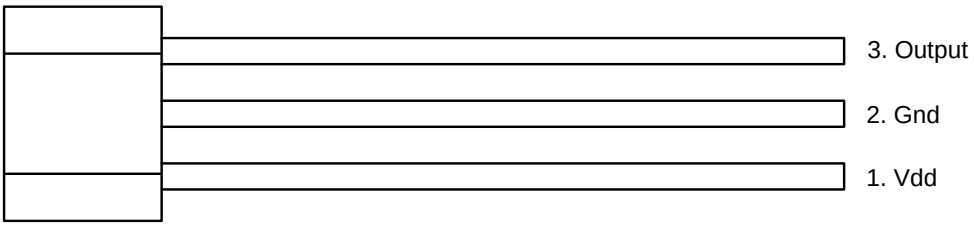

Figure 4

Markt Schwabener Str. 8
85464 Finsing
Germany

Tel.: +49 (0)8121-2574100
Fax: +49 (0)8121-2574101
Email: info@chenyang-gmbh.com
http://www.chenyang-gmbh.com

Pin Descriptions

Name	I/O	Pin No.	Description
Vdd	P	1	**Positive power supply**
Gnd	G	2	**Ground**
Output	O	3	**Driver output**

Legend: I=input, O=output, I/O=input/output, P=power supply, G=ground

Marking Information

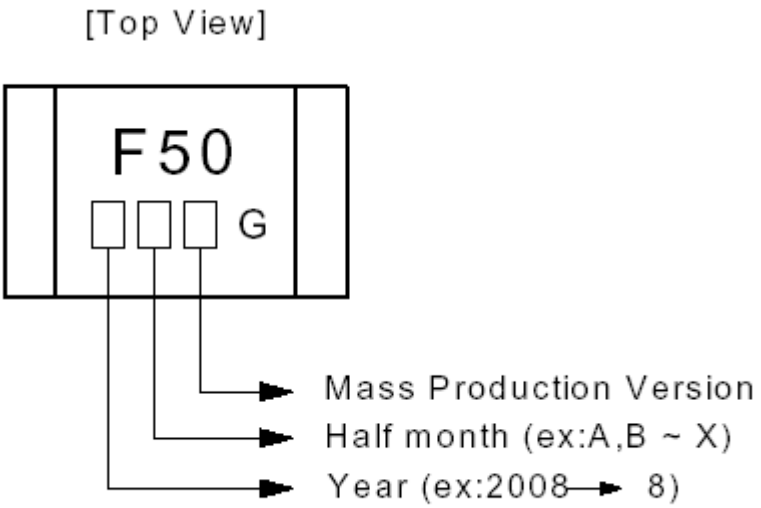

Figure 5

Order Information

Part Number	Operating Temperature	Package	MOQ
CYLF50	-20 ℃ to +85 ℃	SIP-3L	1000ea

Markt Schwabener Str. 8
85464 Finsing
Germany

Tel.: +49 (0)8121-2574100
Fax: +49 (0)8121-2574101
Email: info@chenyang-gmbh.com
http://www.chenyang-gmbh.com

Package Dimension (Unit: mm)
SIP-3L(Pb Free)

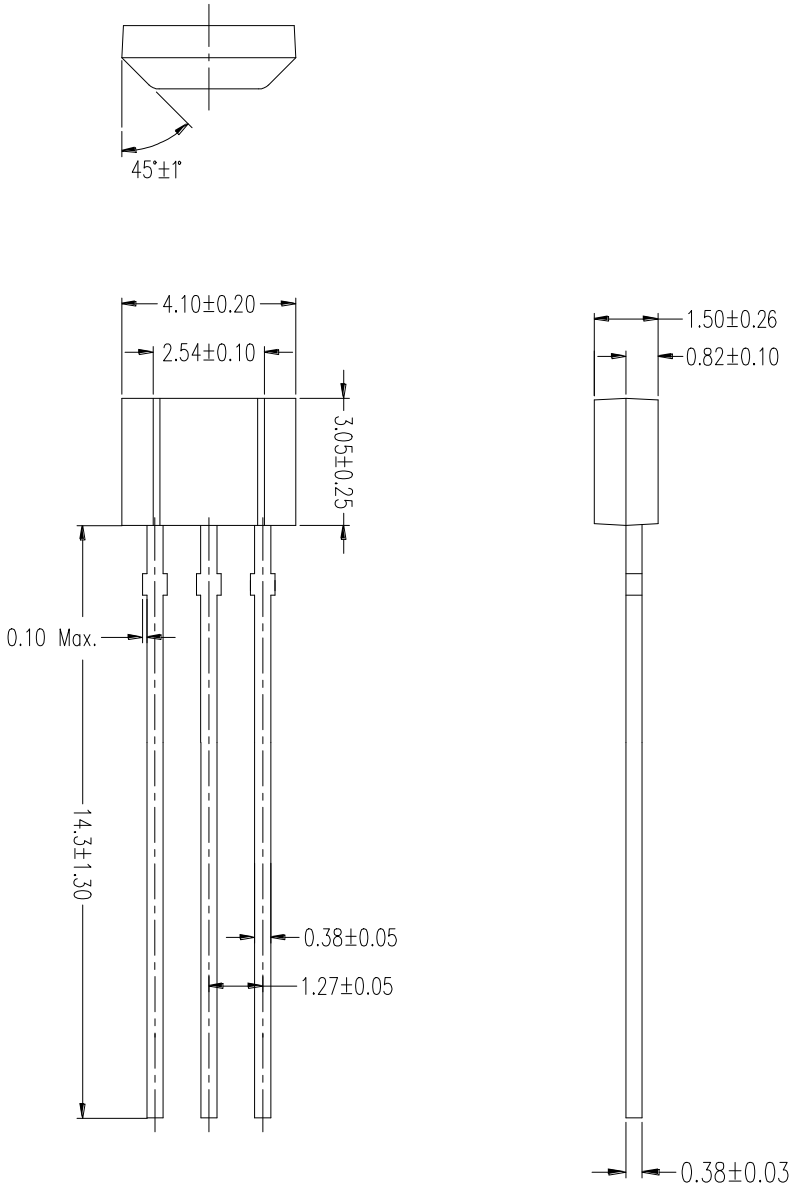

Linear Hall Effect Sensors (Elements)
CYSJ2A Linear Hall Effect Sensor

CYSJ2A Hall Effect Sensor is outstanding for its Ultra-High sensitivity and its low temperature coefficients. This sensor is made by using the technique of Molecular Beam Epitaxy (MBE), which provides excellent uniformity and reproducibility.

Features:

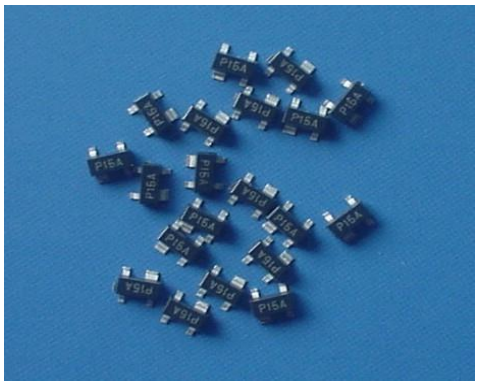

- Ultra-High Sensitivity (180V/AT)
- Low current requirement
- Very low power consumption
- Extended operating temperature range
- Small linearity error of the Hall voltage
- Plastic miniature package SOT-143 for surface mounting or SIP (Through Slot
- Wide measuring range (0.1µT-3T)

Applications:

- Magnetic field measurement
- Low temperature applications
- Current and power measurement
- Control of brushless DC motors
- Microswitches
- Position sensors
- Speed and RPM sensing

1. Model

CYSJ2A Hall Sensor is fabricated from AlGaAs/InGaAs/GaAs-2DEG (two-dimensional electron gas) heterojunction semiconductor.

2. Absolute Maximum Ratings

Parameter	Symbol	Rating	Unit
Control Voltage	V_c	6	V
Control Current	I_c	9	mA
Power Dissipation	P_D	54	mW
Operating Temperature	T_{op}	-100 ~ +200	^oC
Storage Temperature	T_s	-100 ~ +200	^oC
Soldering Temperature#	T_{sol}	260	^oC

#Soldering time: 10 seconds

Markt Schwabener Str. 8
85464 Finsing
Germany

Tel.: +49 (0)8121-2574100
Fax: +49 (0)8121-2574101
Email: info@chenyang-gmbh.com
http://www.chenyang-gmbh.com

3. Electrical Characteristics

Parameter	Symbol	Test Condition	MIN	TYP	MAX	Unit
Output Hall Voltage	V_H	Ic=1mA, B=100mT	13	16	19	mV
Residual Ratio*[1]	V_{HO}/V_H	Ic=1mA	-5	-	+5	%
Residual Ratio*[1]	V_{HO}/V_H	Ic=5mA	-7	-	+7	%
Input Resistance	R_{IN}	Ic=1mA, B=0 mT	620	720	780	Ω
Output Resistance	R_{OUT}	Ic=1mA, B=0 mT	620	720	780	Ω
Temperature Coefficient of Hall Voltage*[2]	α	Ic=1mA, B=100mT (T_1= -100 °C,T_2=150 °C)	-0.05	-0.06	-0.08	%/ °C
Temperature Coefficient of Input Resistance*[3]	β	Ic=1mA, B=0 mT (T_1= -100 °C,T_2=150 °C)	-	0.3	0.4	%/ °C
Linearity of Hall Voltage*[4]	γ	Ic= 1mA, B_1=60mT,B_2=500mT	-	0.5	1.0	%

.

*1 $$Residual\ Ratio = \frac{V_{Ho}(B=0mT)}{V_H(B=100mT)}$$

*2 $$\alpha = \frac{1}{V_H(T_1)} \times \frac{V_H(T_2) - V_H(T_1)}{T_2 - T_1} \times 100$$

*3 $$\beta = \frac{1}{R_{IN}(T_1)} \times \frac{R_{IN}(T_2) - R_{IN}(T_1)}{T_2 - T_1} \times 100$$

*4 $$\gamma = \frac{K_H(B_2) - K_H(B_1)}{K_H(B_2) + K_H(B_1)} \times 200$$

$$K_H = \frac{V_H}{IB}$$

V_{Ho}: Offset Voltage

B: Magnetic Flux Density

T_1, T_2: Ambient Temperature

K_H: Current Sensitivity

4. Part Numbers and Ordering Information

Package	P/N	Mark	Packing	Temperature range
SOT-143	CYSJ2A-S	P2A	3000 units/reel	-100°C ~ +200°C
SIP/2.7x2.35x0.95mm	CYSJ2A-T	P2A	500 units/pack	-100°C ~ +200°C

Markt Schwabener Str. 8
85464 Finsing
Germany

Tel.: +49 (0)8121-2574100
Fax: +49 (0)8121-2574101
Email: info@chenyang-gmbh.com
http://www.chenyang-gmbh.com

5. Shape of the Hall sensor

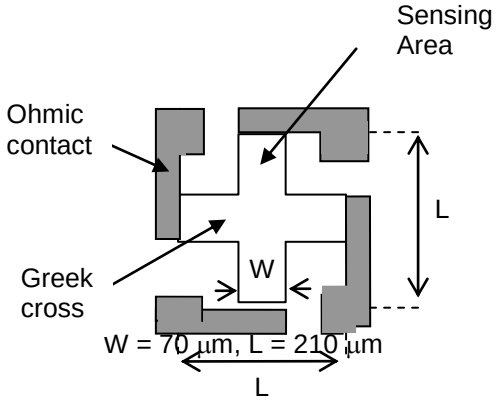

6. Typical Characteristics

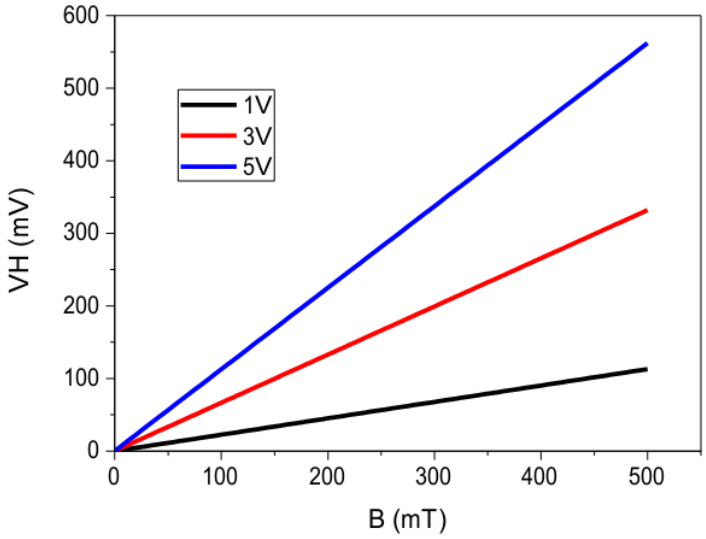

Output Hall Voltage versus magnetic field under supplying 1V, 3V and 5V across the inputs of Hall Sensor

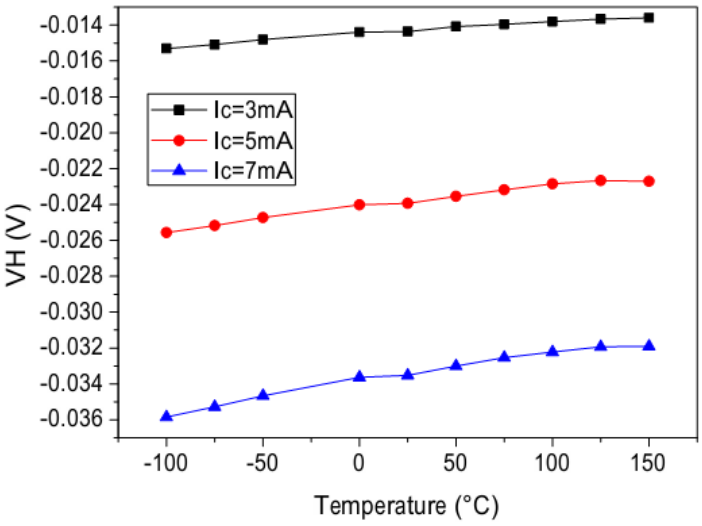

Output Hall Voltage versus temperature under supplying bias currents of 3mA, 5mA and 7mA across the inputs of Hall Sensor and at 30mT magnetic field

7. Outline drawings (unit: mm)

7.1. Package SOT 143 (Surface Mount)

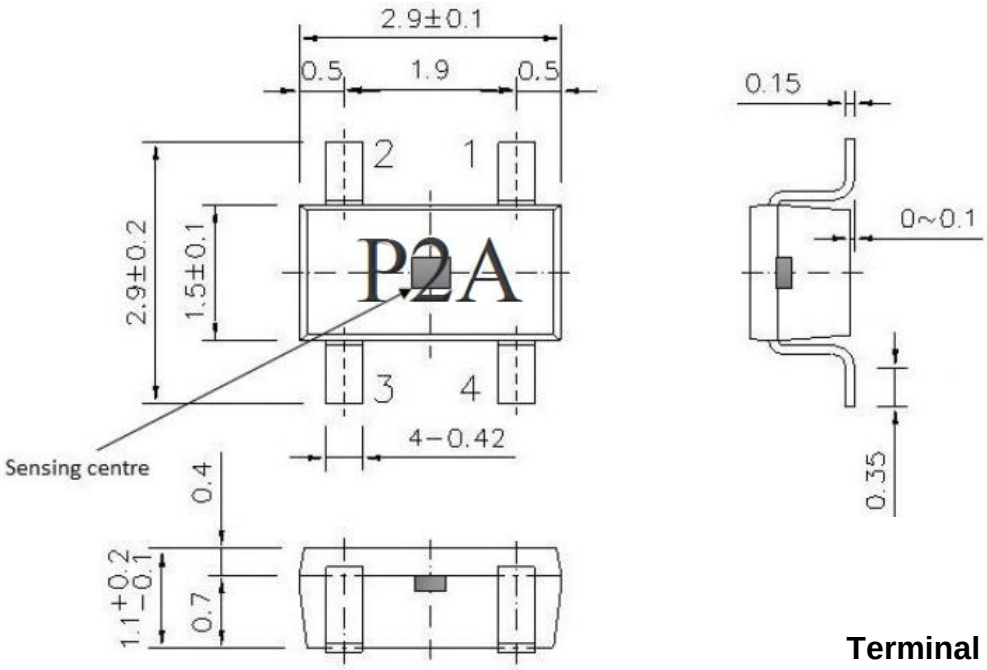

Terminal Connection

No.	Terminal	Polarity
1	Input	(±)
2	Output	(±)
3	Input	(∓)
4	Output	(∓)

7.2. Package SIP (Through Slot)

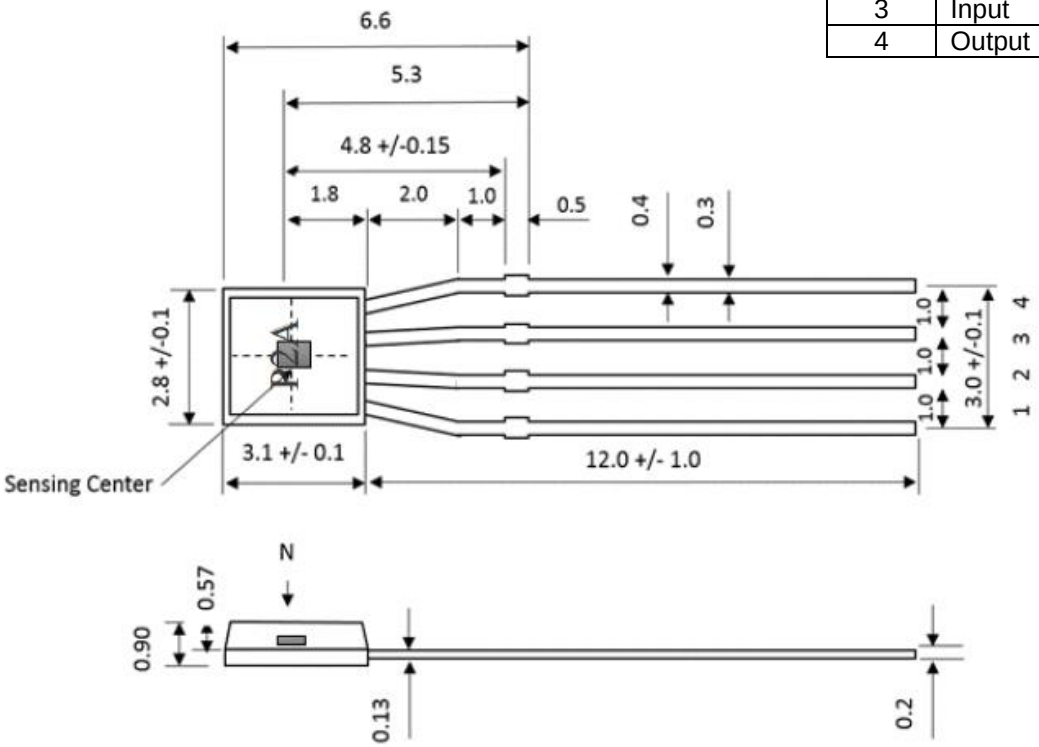

8. Connection

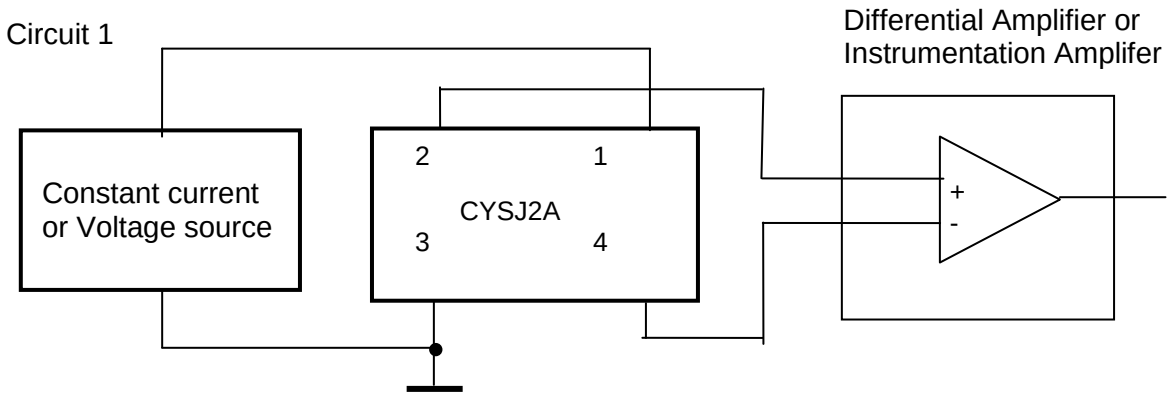

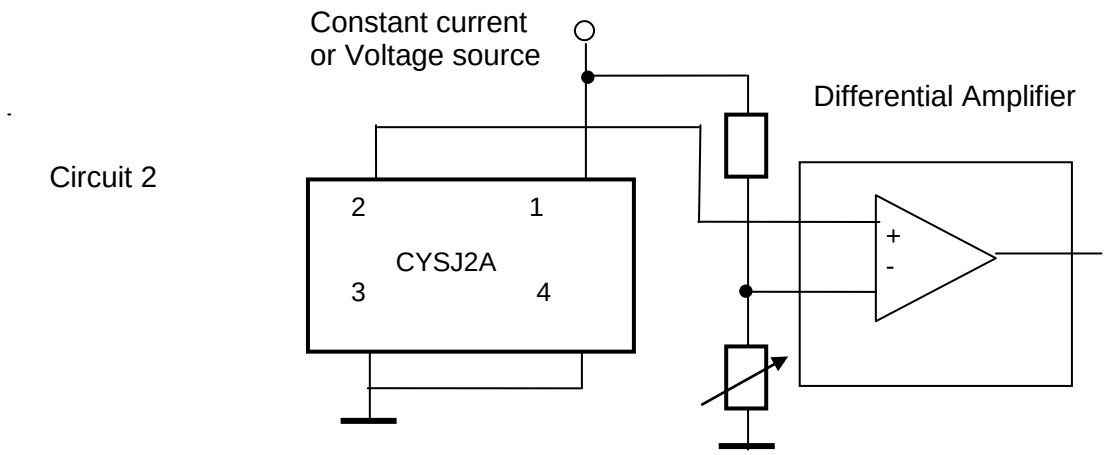

9. Application Notes

The Hall voltage V_H can be positive and negative. But if one connects the sensor as follows:

Pin 1:	positive input voltage V+, for instance +5VDC.
Pin 2:	GND
Pin 3:	OUTPUT
Pin 4:	GND

One can only measure the positive voltage at the pin 3. This means that the output voltage at zero magnetic field is not zero. This voltage is called as offset voltage. The output voltage in this case is not equal to the Hall voltage. The output voltage is equal to the sum of offset voltage and Hall voltage.

CYSJ3A Linear Hall Effect Sensor

CYSJ3A Hall Effect Sensor is outstanding for its Ultra-High sensitivity and its low temperature coefficients. This sensor is made by using the technique of Molecular Beam Epitaxy (MBE), which provides excellent uniformity and reproducibility.

Features:

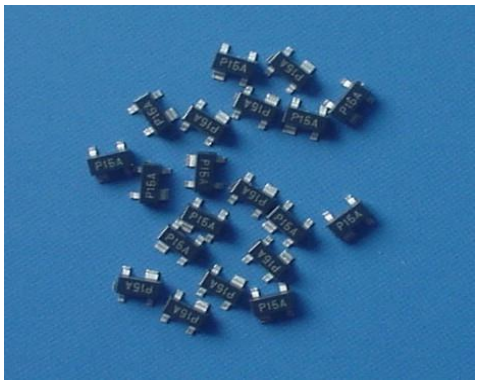

- Ultra-High Sensitivity (320V/AT)
- Low current requirement
- Very low power consumption
- Extended operating temperature range
- Small linearity error of the Hall voltage
- Plastic miniature package SOT-143 for surface mounting or SIP (Through Slot
- Wide measuring range (0.1µT-3T)

Applications:

- Magnetic field measurement
- Low temperature applications
- Current and power measurement
- Control of brushless DC motors
- Microswitches
- Position sensors
- Speed and RPM sensing

1. Model

CYSJ3A Hall Sensor is fabricated from AlGaAs/InGaAs/GaAs-2DEG (two-dimensional electron gas) heterojunction semiconductor.

2. Absolute Maximum Ratings

Parameter	Symbol	Rating	Unit
Control Voltage	V_c	5	V
Control Current	I_c	4	mA
Power Dissipation	P_D	20	mW
Operating Temperature	T_{op}	-100 ~ +200	^oC
Storage Temperature	T_s	-100 ~ +200	^oC
Soldering Temperature#	T_{sol}	260	^oC

#Soldering time: 10 seconds

Markt Schwabener Str. 8
85464 Finsing
Germany

Tel.: +49 (0)8121-2574100
Fax: +49 (0)8121-2574101
Email: info@chenyang-gmbh.com
http://www.chenyang-gmbh.com

3. Electrical Characteristics

Parameter	Symbol	Test Condition	MIN	TYP	MAX	Unit
Output Hall Voltage	V_H	Ic=1mA, B=100mT	24	28	36	mV
Residual Ratio*[1]	V_{HO}/V_H	Ic=1mA	-10	-	+10	%
Residual Ratio*[1]	V_{HO}/V_H	Ic=0.5mA	-4	-	+4	%
Input Resistance	R_{IN}	Ic=1mA, B=0 mT	1.1	1.25	1.45	kΩ
Output Resistance	R_{OUT}	Ic=1mA, B=0 mT	1.1	1.25	1.45	kΩ
Temperature Coefficient of Hall Voltage*[2]	α	Ic=1mA, B=100mT (T_1= -100 °C,T_2=150 °C)	-0.05	-0.08	-0.1	%/ °C
Temperature Coefficient of Input Resistance*[3]	β	Ic=1mA, B=0 mT (T_1= -100 °C,T_2=150 °C)	-	0.3	0.4	%/ °C
Linearity of Hall Voltage*[4]	γ	Ic= 1mA, B_1=60mT,B_2=500mT	-	1	1.5	%

-

*1 $$Residual\ Ratio = \frac{V_{Ho}(B=0mT)}{V_H(B=100mT)}$$

*2 $$\alpha = \frac{1}{V_H(T_1)} \times \frac{V_H(T_2) - V_H(T_1)}{T_2 - T_1} \times 100$$

*3 $$\beta = \frac{1}{R_{IN}(T_1)} \times \frac{R_{IN}(T_2) - R_{IN}(T_1)}{T_2 - T_1} \times 100$$

*4 $$\gamma = \frac{K_H(B_2) - K_H(B_1)}{K_H(B_2) + K_H(B_1)} \times 200$$

$$K_H = \frac{V_H}{IB}$$

V_{Ho}: Offset Voltage

B: Magnetic Flux Density

T_1, T_2: Ambient Temperature

K_H: Current Sensitivity

4. Part Numbers and Ordering Information

Package	P/N	Mark	Packing	Temperature range
SOT-143	CYSJ3A-S	P3A	3000 units/reel	-100°C ~ +200°C
SIP/2.7x2.35x0.95mm	CYSJ3A-T	P3A	500 units/pack	-100°C ~ +200°C

5. Shape of the Hall sensor

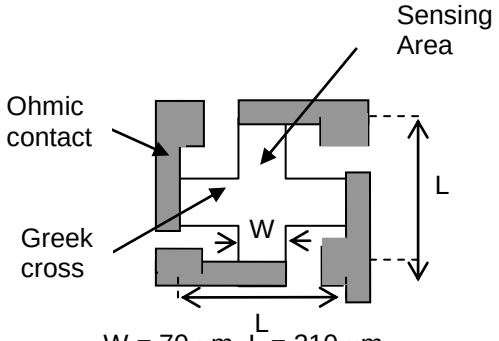

W = 70 µm, L = 210 µm

6. Typical Characteristics

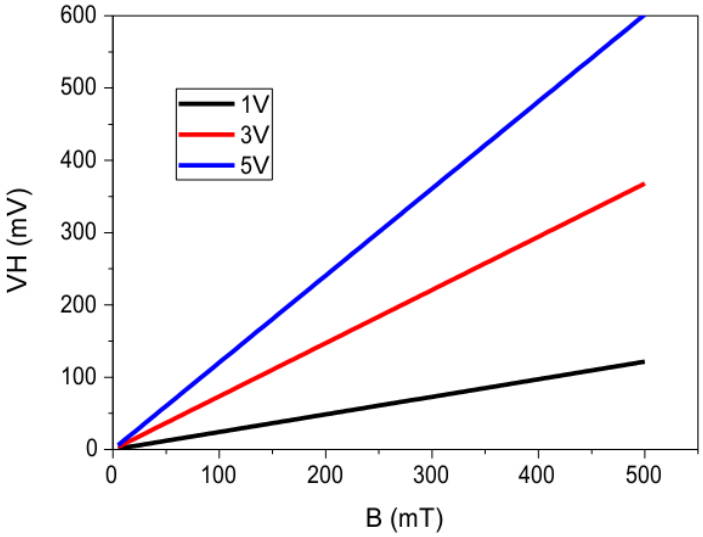

Output Hall Voltage versus magnetic field under supplying 1V, 3V and 5V across the inputs of Hall Sensor

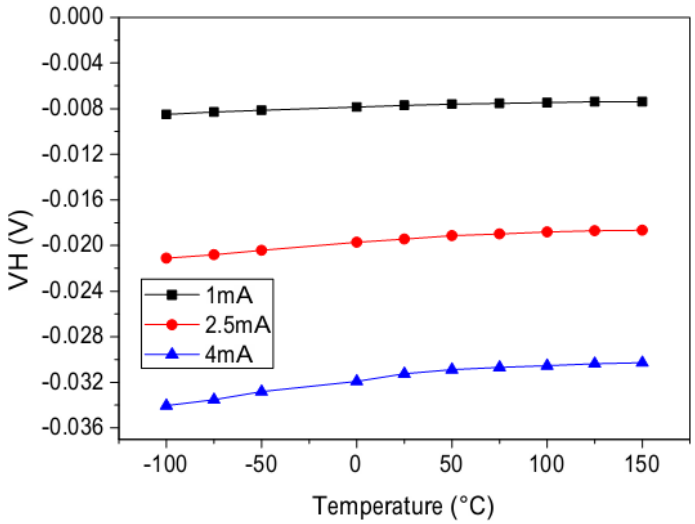

Output Hall Voltage versus temperature under supplying bias currents of 1mA, 2.5mA and 4mA across the inputs of Hall Sensor and at 30mT magnetic field

Markt Schwabener Str. 8
85464 Finsing
Germany

Tel.: +49 (0)8121-2574100
Fax: +49 (0)8121-2574101
Email: info@chenyang-gmbh.com
http://www.chenyang-gmbh.com

7. Outline drawings (unit: mm)

7.1. Package SOT 143 (Surface Mount)

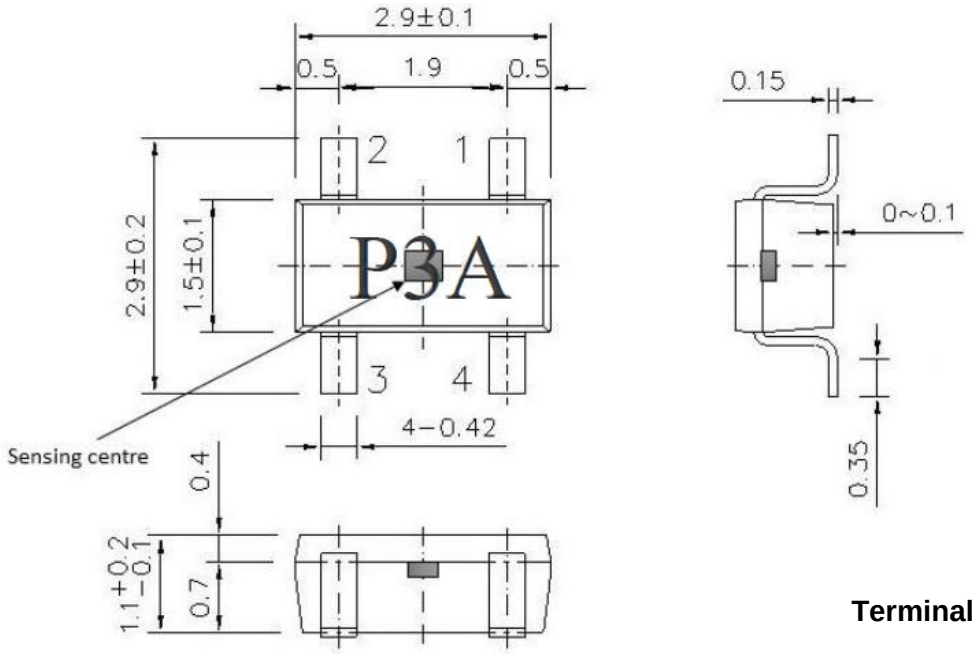

Terminal Connection

No.	Terminal	Polarity
1	Input	(±)
2	Output	(±)
3	Input	(∓)
4	Output	(∓)

7.2. Package SIP (Through Slot)

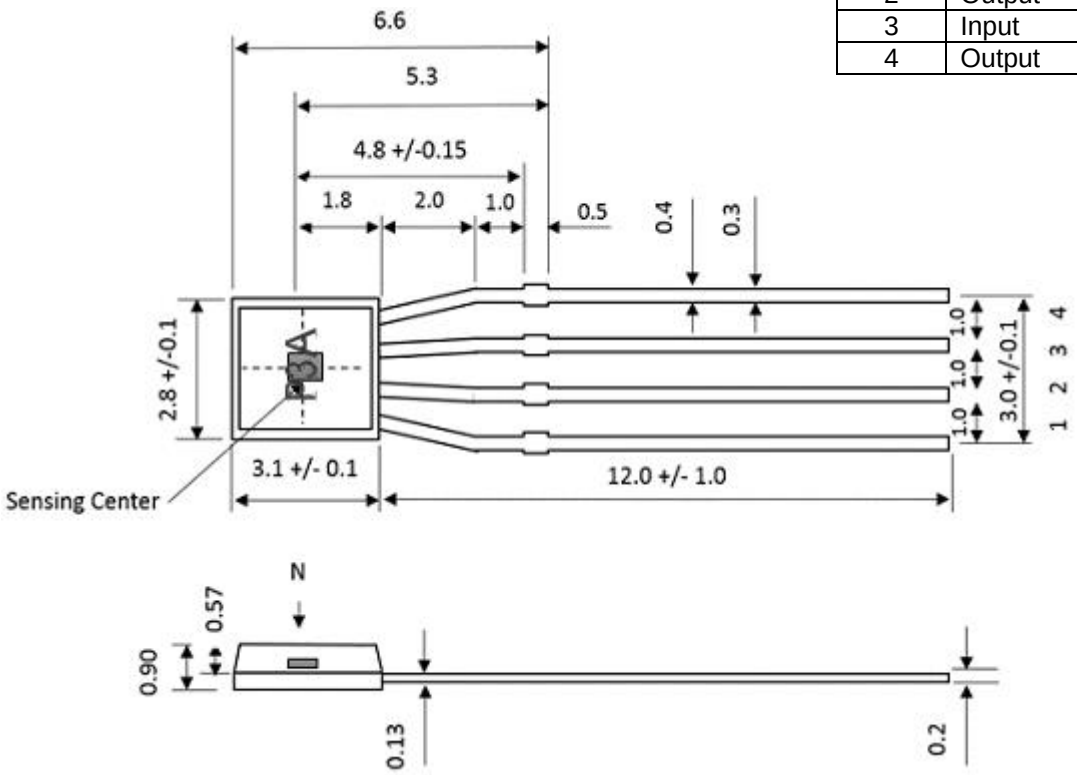

8. Connection

Circuit 1

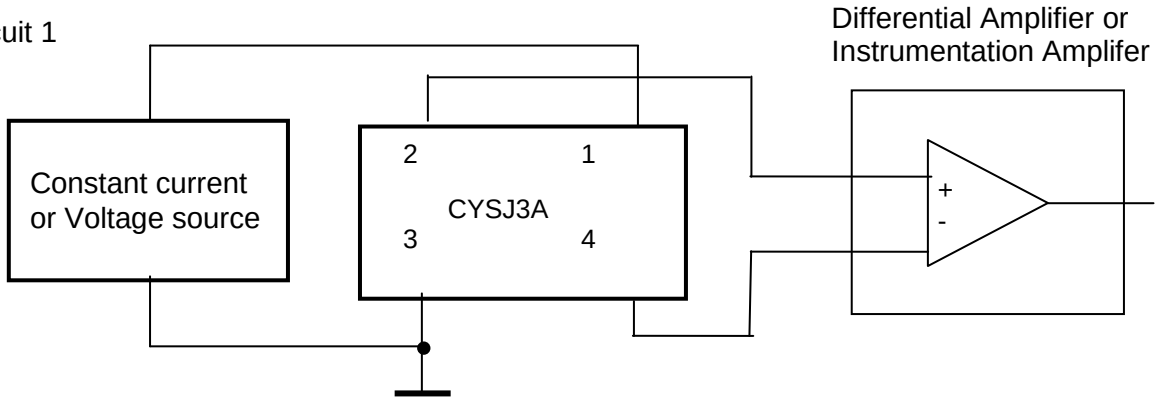

Circuit 2

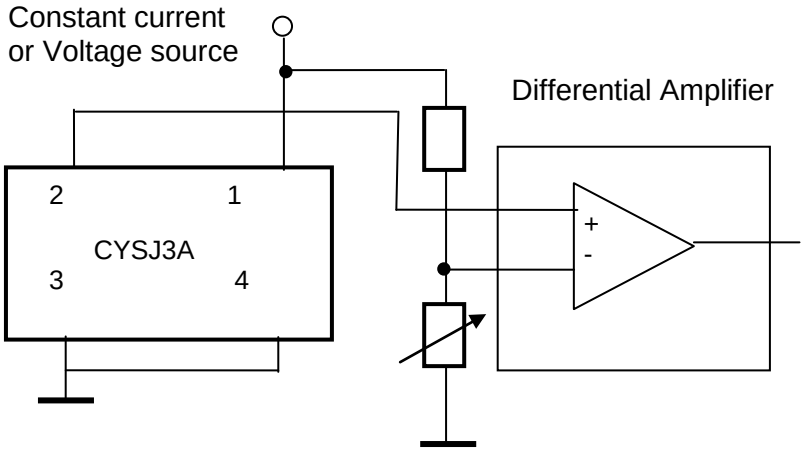

9. Application Notes

The Hall voltage V_H can be positive and negative. But if one connects the sensor as follows:

Pin 1:	positive input voltage V+, for instance +5VDC.
Pin 2:	GND
Pin 3:	OUTPUT
Pin 4:	GND

One can only measure the positive voltage at the pin 3. This means that the output voltage at zero magnetic field is not zero. This voltage is called as offset voltage. The output voltage in this case is not equal to the Hall voltage. The output voltage is equal to the sum of offset voltage and Hall voltage.

CYSJ15A Linear Hall Effect Sensor

CYSJ15A Hall Effect Sensor is outstanding for its Ultra-High sensitivity and its low temperature coefficients. This sensor is made by using the technique of Molecular Beam Epitaxy (MBE), which provides excellent uniformity and reproducibility.

Features:

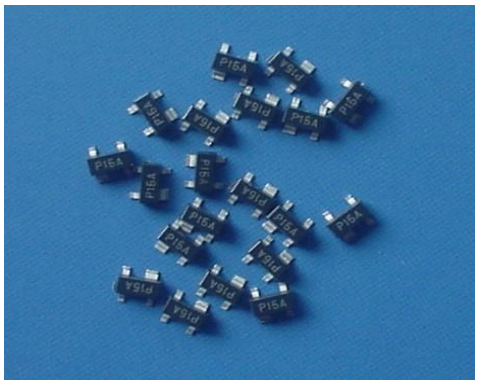

- Ultra-High Sensitivity (880V/AT)
- Low current requirement
- Very low power consumption
- Extended operating temperature range
- Small linearity error of the Hall voltage
- Plastic miniature package SOT-143 for surface mounting or SIP (Through Slot)
- Wide measuring range (0.1µT-3T)

Applications:

- Magnetic field measurement
- Low temperature applications
- Current and power measurement
- Control of brushless DC motors
- Microswitches
- Position sensors
- Speed and RPM sensing

1. Model

CYSJ15A Hall Sensor is fabricated from AlGaAs/InGaAs/GaAs-2DEG (two-dimensional electron gas) heterojunction semiconductor.

2. Absolute Maximum Ratings

Parameter	Symbol	Rating	Unit
Control Voltage	V_c	5	V
Control Current	I_c	1.4	mA
Power Dissipation	P_D	7	mW
Operating Temperature	T_{op}	-100 ~ +200	^oC
Storage Temperature	T_s	-100 ~ +200	^oC
Soldering Temperature#	T_{sol}	260	^oC

#Soldering time: 10 seconds

Markt Schwabener Str. 8
85464 Finsing
Germany

Tel.: +49 (0)8121-2574100
Fax: +49 (0)8121-2574101
Email: info@chenyang-gmbh.com
http://www.chenyang-gmbh.com

3. Electrical Characteristics

Parameter	Symbol	Test Condition	MIN	TYP	MAX	Unit
Output Hall Voltage	V_H	Ic=1mA, B=100mT	74	85	96	mV
Residual Ratio*[1]	V_{HO}/V_H	Ic=1mA	-10	-	+10	%
Residual Ratio*[1]	V_{HO}/V_H	Ic=0.5mA	-5	-	+5	%
Input Resistance	R_{IN}	Ic=0.1mA, B=0 mT	3.1	3.5	4.1	kΩ
Output Resistance	R_{OUT}	Ic=0.1mA, B=0 mT	3.1	3.5	4.1	kΩ
Temperature Coefficient of Hall Voltage*[2]	α	Ic=1mA, B=100mT (T_1= -100 °C,T_2=150 °C)	-0.05	-0.08	-0.13	%/ °C
Temperature Coefficient of Input Resistance*[3]	β	Ic=1mA, B=0 mT (T_1= -100 °C,T_2=150 °C)	-	0.3	0.4	%/ °C
Linearity of Hall Voltage*[4]	γ	Ic= 1mA, B_1=60mT,B_2=500mT	-	1	1.5	%

-

*1 $$Residual\ Ratio = \frac{V_{Ho}(B=0mT)}{V_H(B=100mT)}$$

*2 $$\alpha = \frac{1}{V_H(T_1)} \times \frac{V_H(T_2) - V_H(T_1)}{T_2 - T_1} \times 100$$

*3 $$\beta = \frac{1}{R_{IN}(T_1)} \times \frac{R_{IN}(T_2) - R_{IN}(T_1)}{T_2 - T_1} \times 100$$

*4 $$\gamma = \frac{K_H(B_2) - K_H(B_1)}{K_H(B_2) + K_H(B_1)} \times 200$$

$$K_H = \frac{V_H}{IB}$$

V_{Ho}: Offset Voltage

B: Magnetic Flux Density

T_1, T_2: Ambient Temperature

K_H: Current Sensitivity

4. Part Numbers and Ordering Information

Package	P/N	Mark	Packing	Temperature range
SOT-143	CYSJ15A-S	15A	3000 units/reel	-100°C ~ +200°C
SIP/2.7x2.35x0.95mm	CYSJ15A-T	15A	500 units/pack	-100°C ~ +200°C

Markt Schwabener Str. 8
85464 Finsing
Germany

Tel.: +49 (0)8121-2574100
Fax: +49 (0)8121-2574101
Email: info@chenyang-gmbh.com
http://www.chenyang-gmbh.com

5. Shape of the Hall sensor

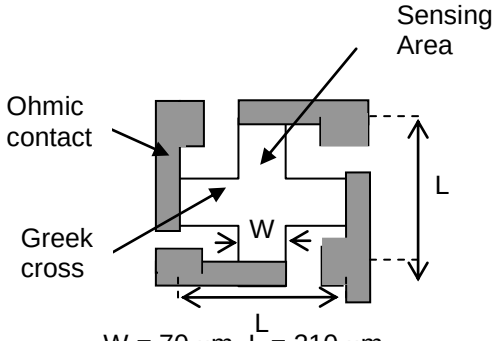

W = 70 µm, L = 210 µm

6. Typical Characteristics

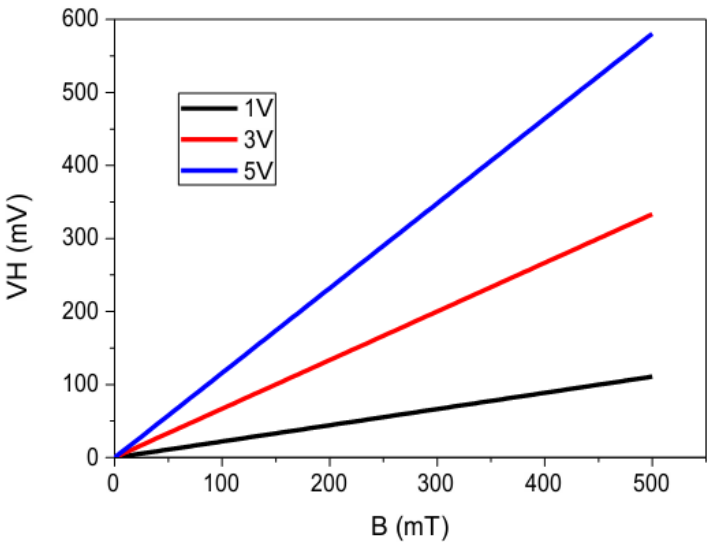

Output Hall Voltage versus magnetic field under supplying 1V, 3V and 5V across the inputs of Hall Sensor

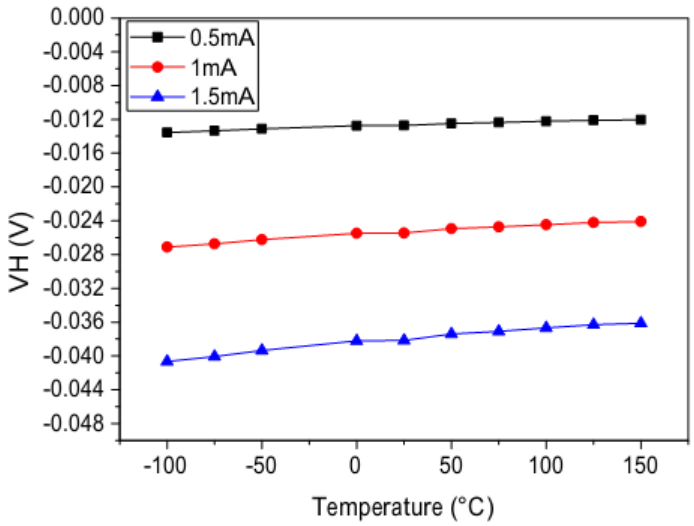

Output Hall Voltage versus temperature under supplying bias currents of 0.5mA, 1mA and 1.5mA across the inputs of Hall Sensor and at 30mT magnetic field

Markt Schwabener Str. 8
85464 Finsing
Germany

Tel.: +49 (0)8121-2574100
Fax: +49 (0)8121-2574101
Email: info@chenyang-gmbh.com
http://www.chenyang-gmbh.com

7. Outline drawings (unit: mm)

7.1. Package SOT 143 (Surface Mount)

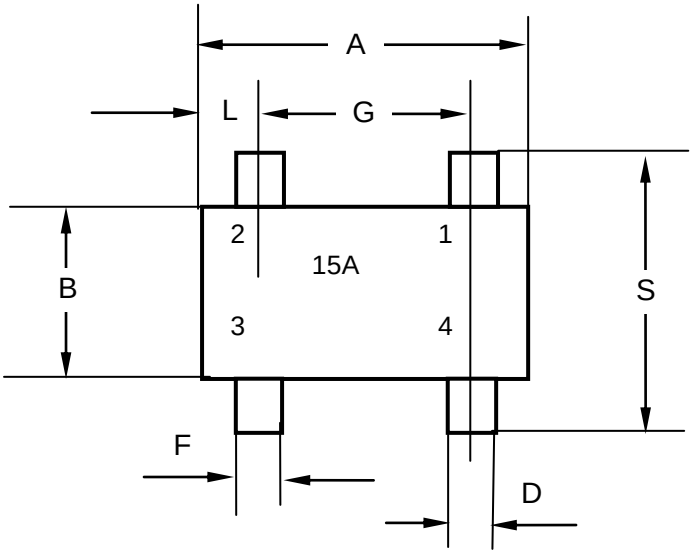

SOT 143 packaged Hall Sensor

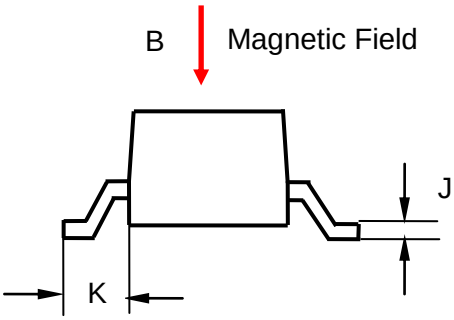

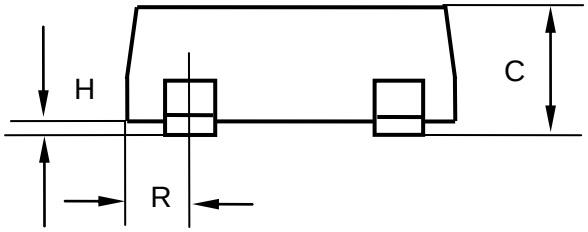

Terminal Connection

Terminal No.		Polarity
1	Input	(±)
2	Output	(±)
3	Input	(∓)
4	Output	(∓)

SOT 143 Package Dimensions

	Min (mm)	Max (mm)
A	2.8	3.0
B	1.4	1.6
C	1.0	1.3
D	0.4	0.5
F	0.4	0.5
G	1.8	2.0
H	0.0	0.1
J	0.1	0.15
K	0.3	0.4
L	0.5	0.6
R	0.5	0.6
S	2.7	3.1

Markt Schwabener Str. 8
85464 Finsing
Germany

Tel.: +49 (0)8121-2574100
Fax: +49 (0)8121-2574101
Email: info@chenyang-gmbh.com
http://www.chenyang-gmbh.com

7.2. Package SIP (Through Slot)

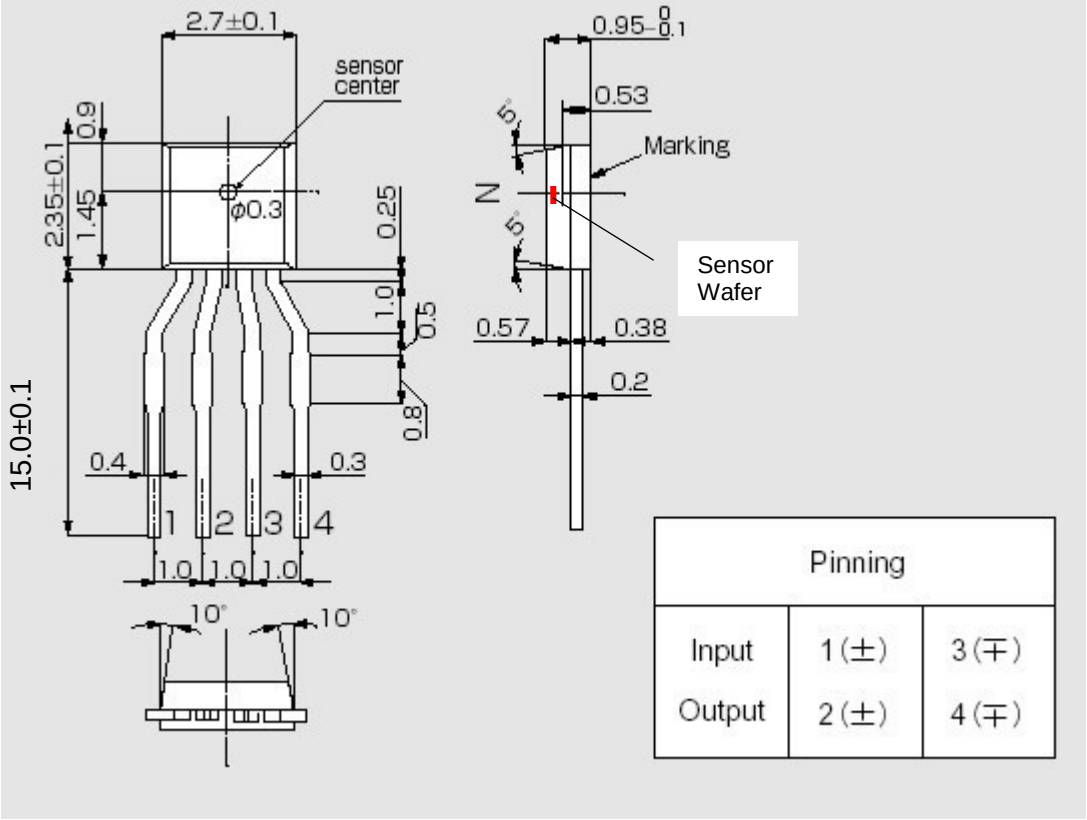

Pinning		
Input	1 (±)	3 (∓)
Output	2 (±)	4 (∓)

8. Connection

Circuit 1

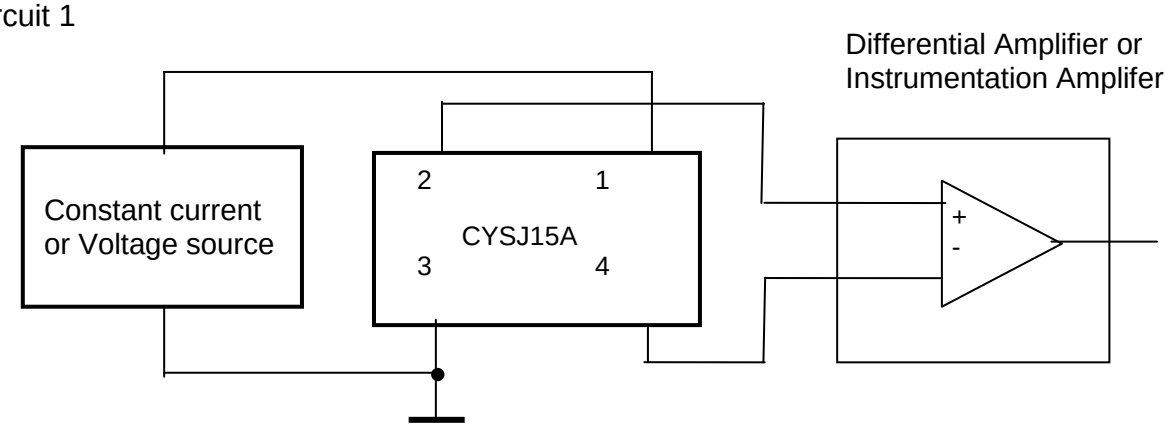

Circuit 2

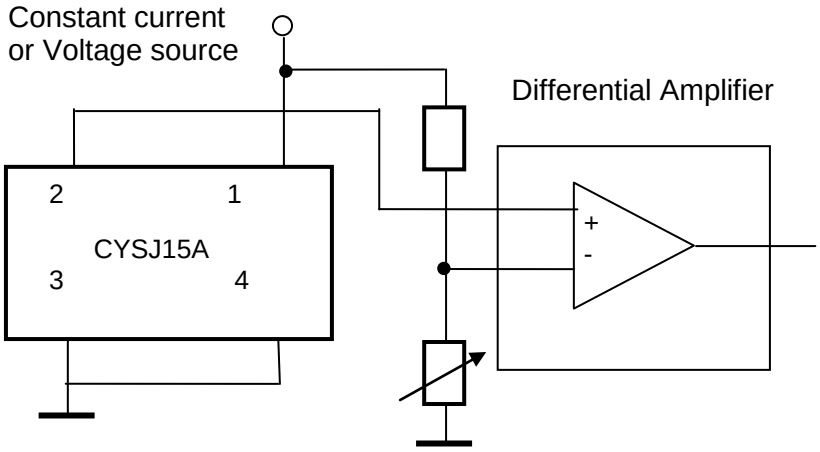

9. Application Notes

The Hall voltage V_H can be positive and negative. But if one connects the sensor as follows:

Pin 1:	positive input voltage V+, for instance +5VDC.
Pin 2:	GND
Pin 3:	OUTPUT
Pin 4:	GND

One can only measure the positive voltage at the pin 3. This means that the output voltage at zero magnetic field is not zero. This voltage is called as offset voltage. The output voltage in this case is not equal to the Hall voltage. The output voltage is equal to the sum of offset voltage and Hall voltage.

CYSJ106C and CYSJ166A GaAs HALL-EFFECT ELEMENTS

CYSJ106C and CYSJ166A series Hall-effect element is an ion-implanted magnetic field sensor made of mono-crystal gallium arsenide (GaAs) semiconductor material group III-V using ion-implanted technology. It can convert a magnetic flux density signal linearly into voltage output.

FEATURES

- High Linearity
- Superior Temperature Stability
- Miniature Package
- Wide measuring range 0-3T

TYPICAL APPLICATION

- Magnetic Field Measurement
- DC Brushless Motor
- Current Sensor
- Non-contact Switch
- Position Control
- Detection Of Revolution

BLOCK DIAGRAM

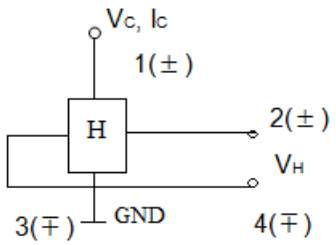

ABSOLUTE MAXIMUM RATING

Parameter	Symbol	Value		Unit
		CYSJ106C	CYSJ166A	
Max. Input Current/Voltage	I_C/V_C	13mA / 10V	- / 12V	mA/V
Max. Input Power	P_D	150	150	mW
Operating temperature range	T_A	-40~125	-40~125	°C
Storage temperature range	T_S	-55~150	-55~150	°C

ELECTRICAL CHARACTERISTICS (T_A=25°C)

Parameter	Symbol	Test conditions	Value		Unit
			CYSJ106C	CYSJ166A	
Hall output voltage	V_H	B=100mT, I_C=8mA/V_C=6V	110～150	156～204	mV
Offset voltage	Vos(Vu)	V_C=6V, B=0mT	±11	±8	mV
Input resistance	R_{in}	B=0mT, I_C=0.1mA	650～850	1000～1500	Ω
Output resistance	R_{out}	B=0mT, I_C=0.1mA	650～850	1800～3000	Ω
Temperature coefficient of Hall output voltage	αV_H	I_C=5mA , B=100mT	-0.06	-0.06	%/°C
Temperature coefficient of input and output resistance	αR_{in} αR_{out}	I_C=0.1mA , B=0mT (Ta=25°C ~ 125°C)	0.3	0.3	%/°C
Linearity	ΔK_H	I_C=5mA B=0.1/0.5T	2	2	%

Notes:

$$\alpha V_H = \frac{1}{V_H(T_1)} x \frac{V_H(T_2)-V_H(T_1)}{T_2-T_1} x100 ,$$

$$\alpha R_{in} = \frac{1}{R_{in}(T_1)} x \frac{R_{in}(T_2)-R_{in}(T_1)}{T_2-T_1} x100$$

$$\Delta K_H = \frac{K(B_1)-K(B_2)}{[K(B_1)+K(B_2)]} x200$$

$$K_H = \frac{V_H}{I_C B}$$

T_1=25°C, T_2=125°C, B_1=0.5T, B_2=0.1T

Markt Schwabener Str. 8
85464 Finsing
Germany

Tel.: +49 (0)8121-2574100
Fax: +49 (0)8121-2574101
Email: info@chenyang-gmbh.com
http://www.chenyang-gmbh.com

Package Outline Drawing (Unit: mm)

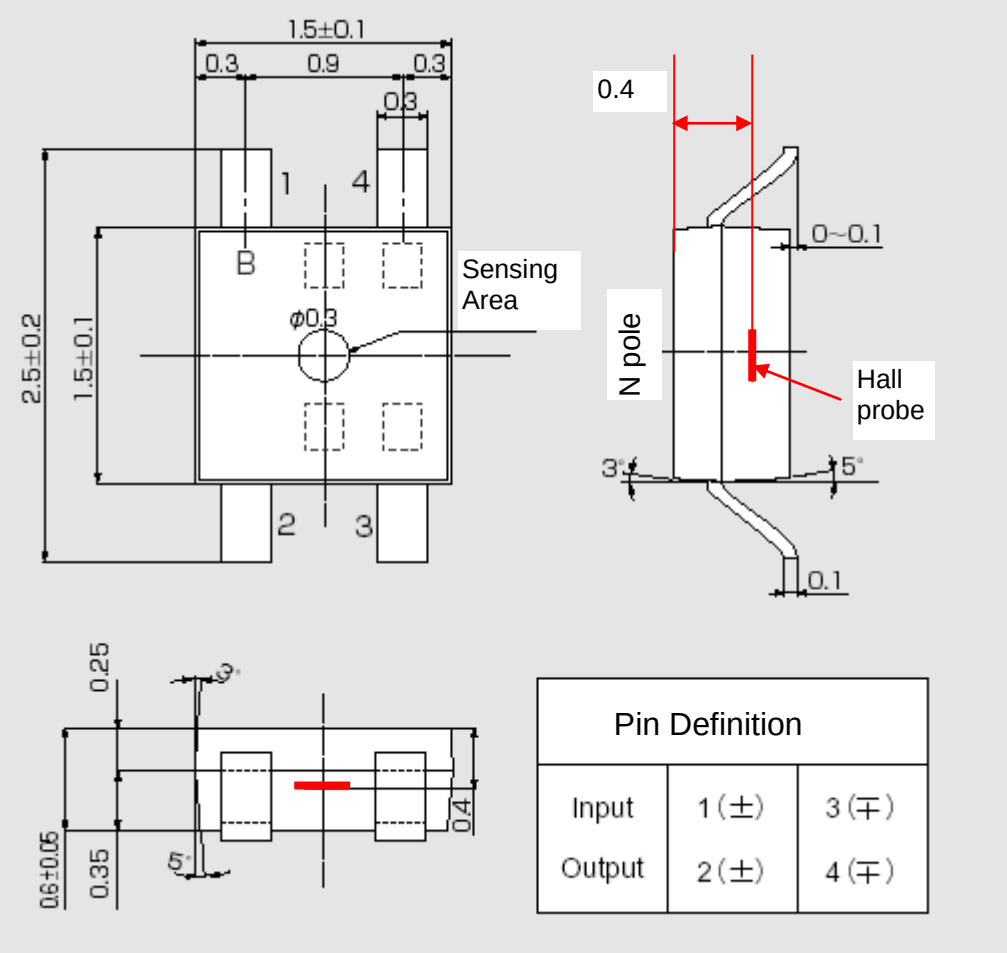

Pin Definition		
Input	1 (±)	3 (∓)
Output	2 (±)	4 (∓)

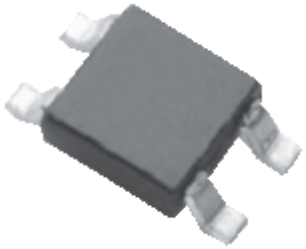

Markt Schwabener Str. 8
85464 Finsing
Germany

Tel.: +49 (0)8121-2574100
Fax: +49 (0)8121-2574101
Email: info@chenyang-gmbh.com
http://www.chenyang-gmbh.com

Characteristic Curves

CYSJ106C: Allowable Package Power Dissipation

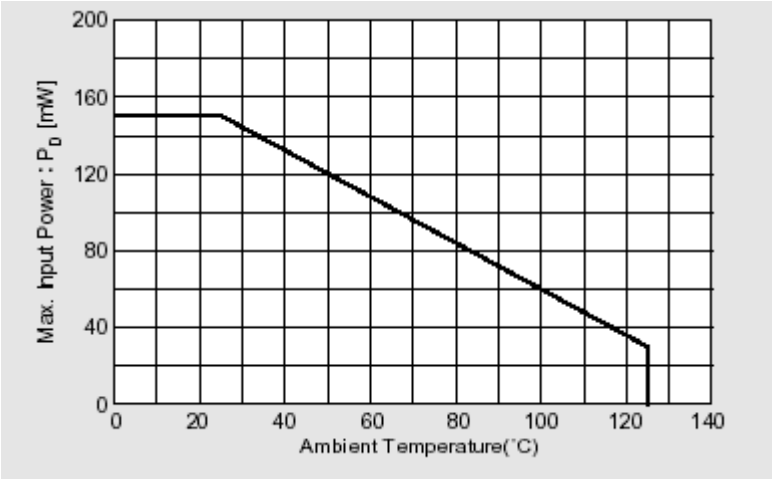

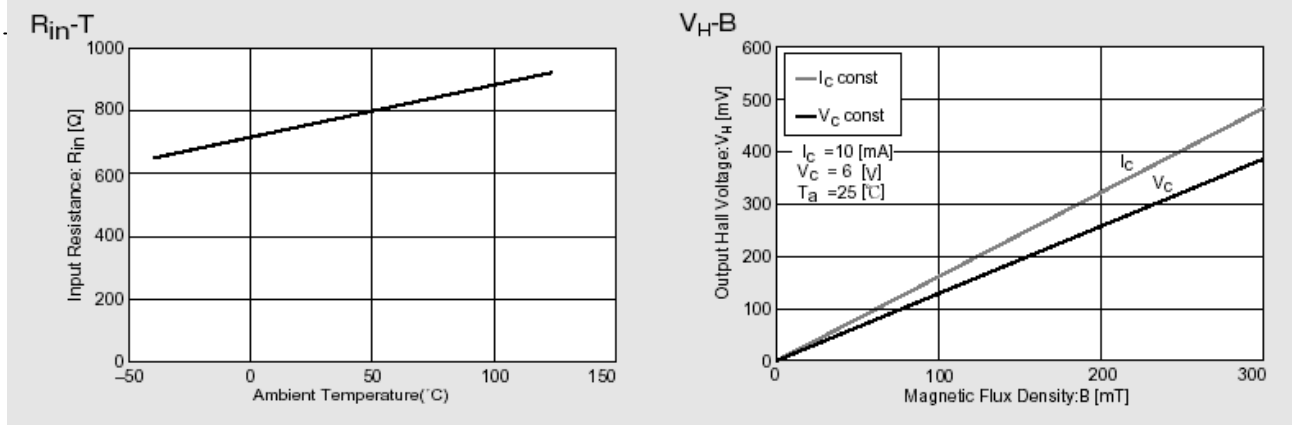

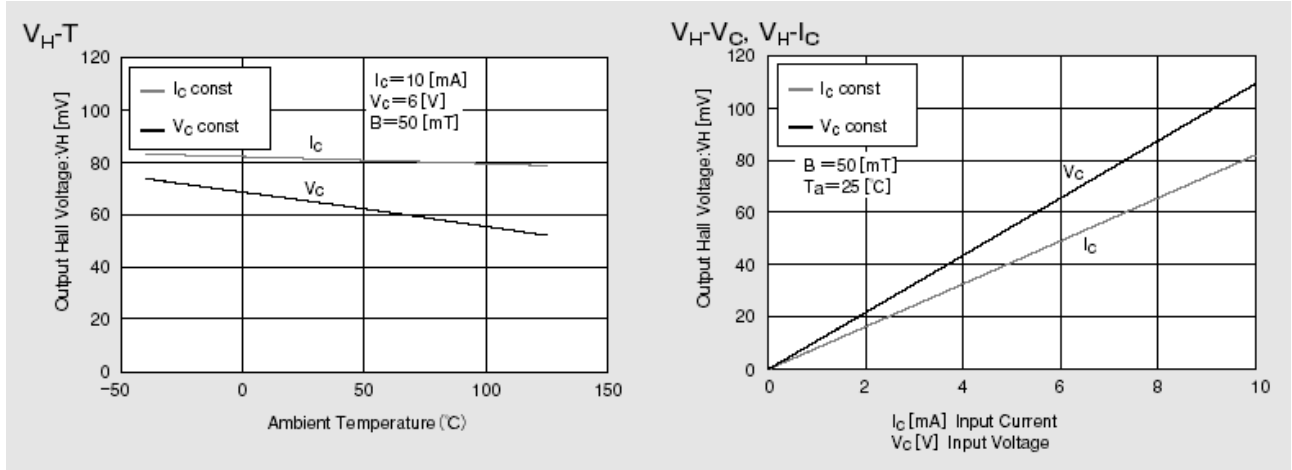

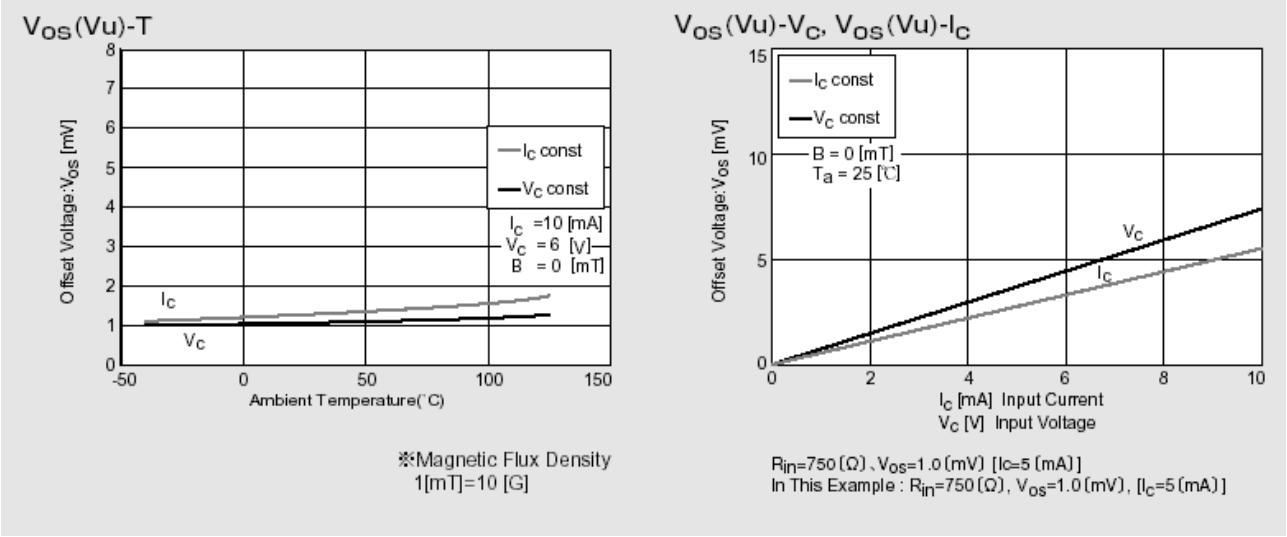

CYSJ166A: Allowable Package Power Dissipation

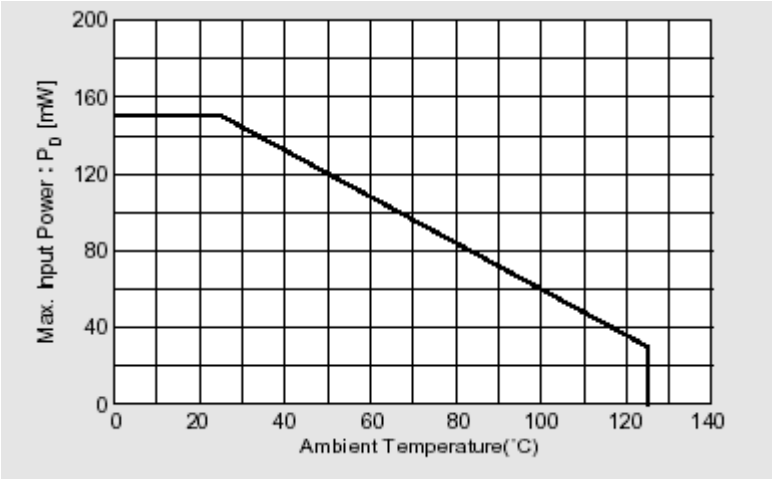

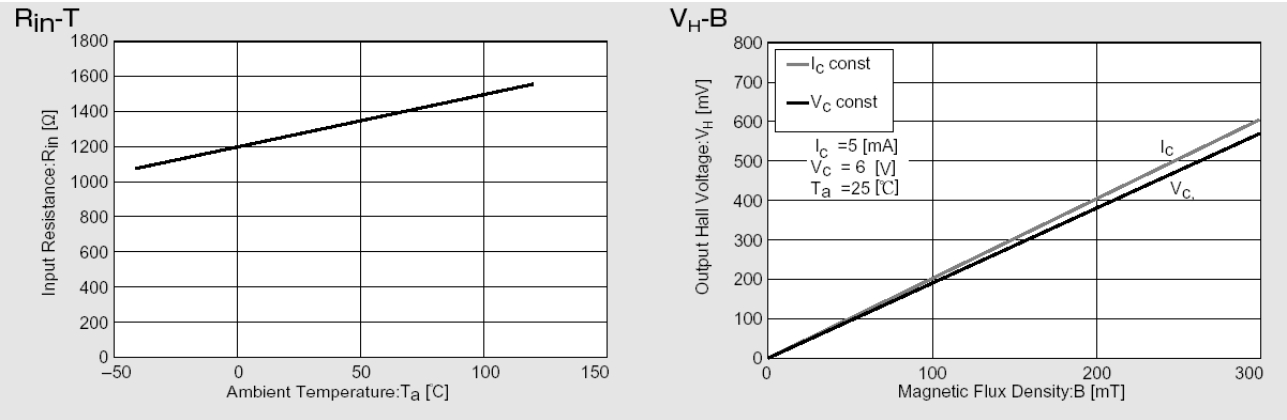

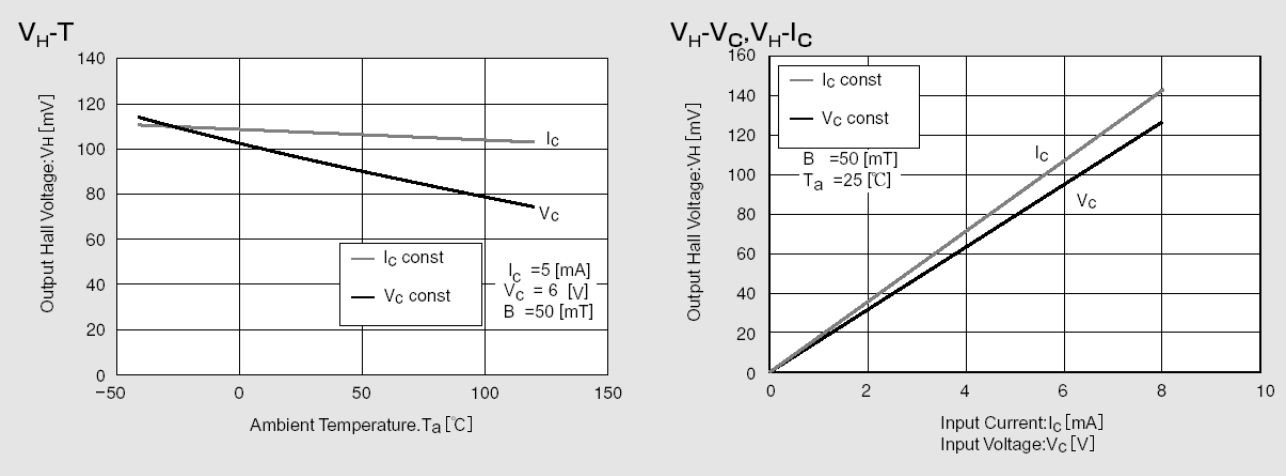

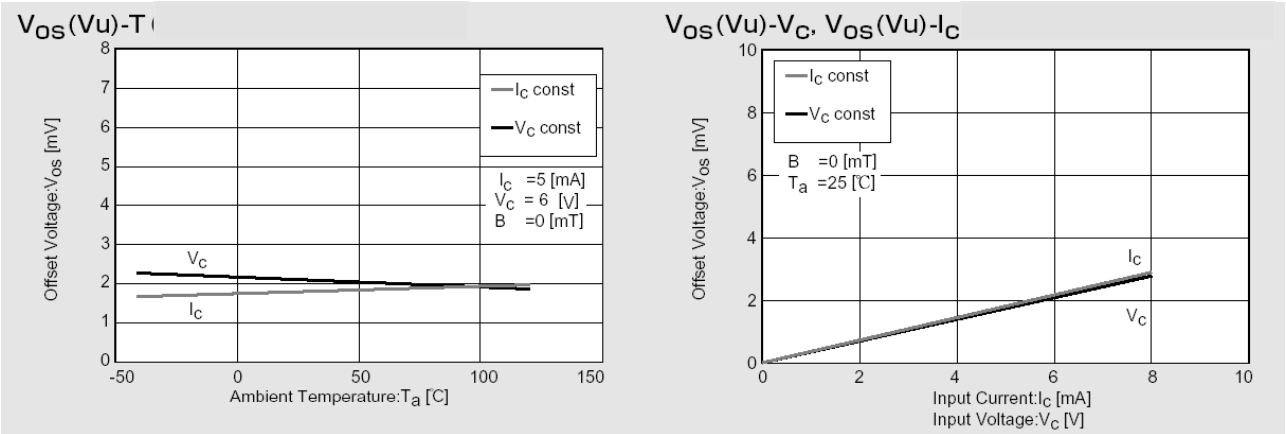

Connection

Circuit 1

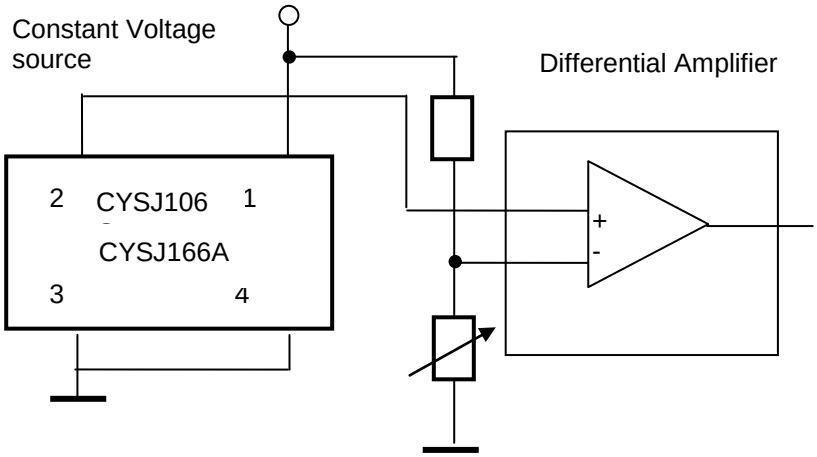

Markt Schwabener Str. 8
85464 Finsing
Germany

Tel.: +49 (0)8121-2574100
Fax: +49 (0)8121-2574101
Email: info@chenyang-gmbh.com
http://www.chenyang-gmbh.com

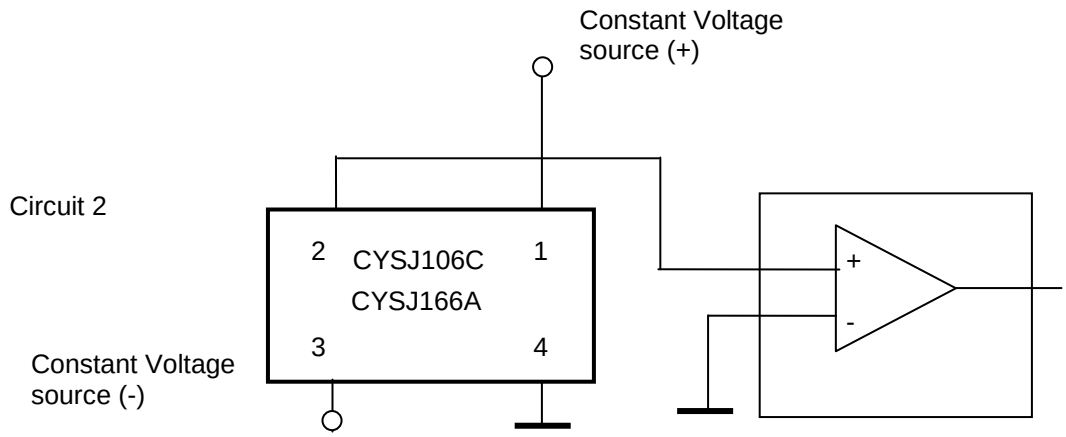

Application Notes

The Hall voltage V_H can be positive and negative. But if one connects the sensor as follows (circuit 1):

Pin 1:	positive input voltage V+, for instance +5VDC.
Pin 3:	GND
Pin 2:	OUTPUT
Pin 4:	GND

One can only measure the positive voltage at the pin 2. This means that the output voltage at zero magnetic field is not zero. This voltage is called as offset voltage. The output voltage in this case is not equal to the Hall voltage. The output voltage is equal to the sum of offset voltage and Hall voltage.

The offset voltage will be zero if you connect double power supplies V+ and V- to the sensor (circuit 2):

Pin 1:	positive input voltage V+, for instance +5VDC.
Pin 3:	negative input voltage V-, for instance -5VDC
Pin 2:	OUTPUT
Pin 4:	GND

In this case the output voltage is equal to the Hall Voltage.

CYSJ302C GaAs Hall Effect Element

CYSJ302C series Hall-effect element is a ion-implanted magnetic field sensor made of mono-crystal gallium arsenide (GaAs) semiconductor material group III-V using ion-implanted technology. It can convert a magnetic flux density signal linearly into voltage output.

FEATURES

- High Linearity
- Superior Temperature Stability
- Miniature Package
- Replacements of **THS119**, **KSY14** and **KSY44** etc.

TYPICAL APPLICATION

- Magnetic Field Measurement
- DC Brushless Motor
- Current Sensor
- Non-contact Switch
- Position Control
- Detection of Revolution

BLOCK DIAGRAM

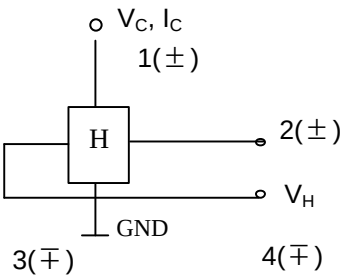

ABSOLUTE MAXIMUM RATINGS

Parameter	Symbol	Value	Unit
Max. Input Voltage	V_C	10V	V
Max. Input Power	P_D	150	mW
Operating temperature range	T_A	-40~125	°C
Storage temperature range	T_S	-40~150	°C
MTBF (Mean Time Between Failure)		>100k	hour

ELECTRICAL CHARACTERISTICS (T_A=25°C)

Parameter	Symbol	Test conditions	Value	Unit
Hall output voltage	V_H	B=50mT, V_C=6V	55~75	mV
Offset voltage	Vos(Vu)	V_C=6V, B=0	±11	mV
Input resistance	R_{in}	B=0mT, I_C=0.1mA	650~850	Ω
Output resistance	R_{out}	B=0mT, I_C=0.1mA	650~850	Ω
Temperature coefficient of Hall output voltage	αV_H	I_C=5mA , B=50mT (Ta=25°C ~ 125°C)	Max: -0.06	%/°C
Temperature coefficient of input resistance	αR_{in}	I_C=0.1mA , B=0mT (Ta=25°C ~ 125°C)	0.3	%/°C
Linearity	ΔK_H	I_C=5mA B=0.1/0.5T	2	%

Notes: $V_H=V_{HM}-V_{OS}(V_u)$ (V_{HM}: measured voltage)

$$\alpha V_H = \frac{1}{V_H(T_1)} x \frac{V_H(T_2)-V_H(T_1)}{T_2-T_1} x100 \text{ ,} \qquad \alpha R_{in} = \frac{1}{R_{in}(T_1)} x \frac{R_{in}(T_2)-R_{in}(T_1)}{T_2-T_1} x100$$

$$\Delta K_H = \frac{K(B_1)-K(B_2)}{[K(B_1)+K(B_2)]} x200 \qquad K_H = \frac{V_H}{I_C B}$$

T_1=25°C, T_2=125°C, B_1=0.5T, B_2=0.1T

Markt Schwabener Str. 8
85464 Finsing
Germany

Tel.: +49 (0)8121-2574100
Fax: +49 (0)8121-2574101
Email: info@chenyang-gmbh.com
http://www.chenyang-gmbh.com

Package Outline Drawing (Unit: mm)

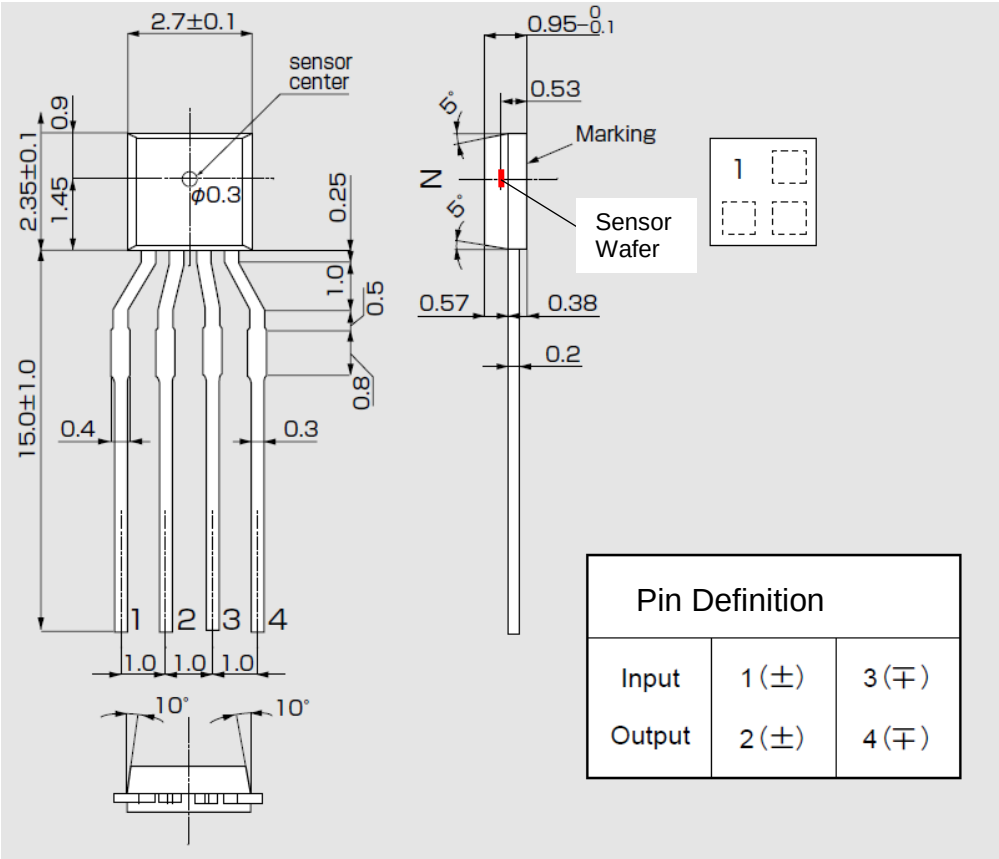

Pin Definition		
Input	1 (±)	3 (∓)
Output	2 (±)	4 (∓)

Characteristic Curves

Allowable Package Power Dissipation

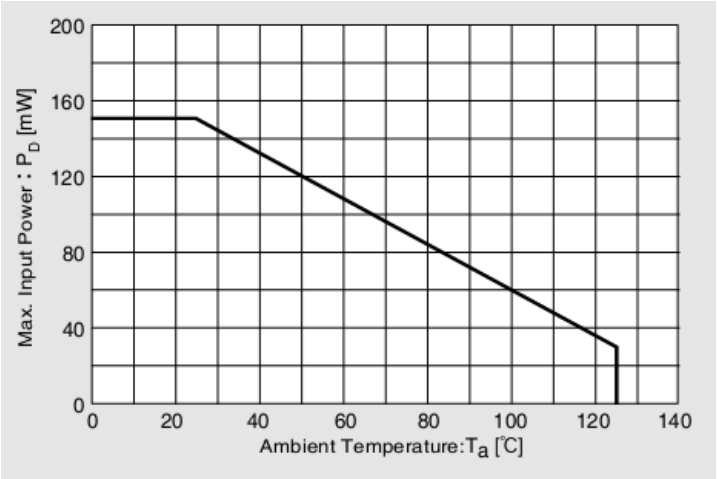

Markt Schwabener Str. 8
85464 Finsing
Germany

Tel.: +49 (0)8121-2574100
Fax: +49 (0)8121-2574101
Email: info@chenyang-gmbh.com
http://www.chenyang-gmbh.com

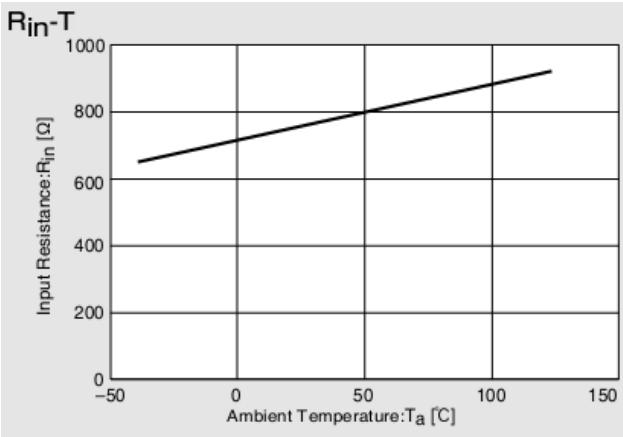

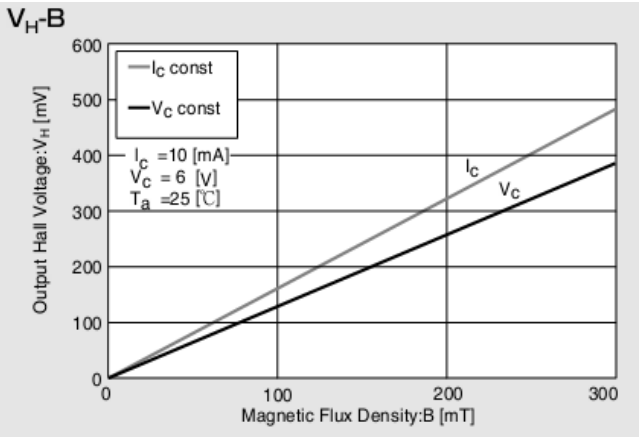

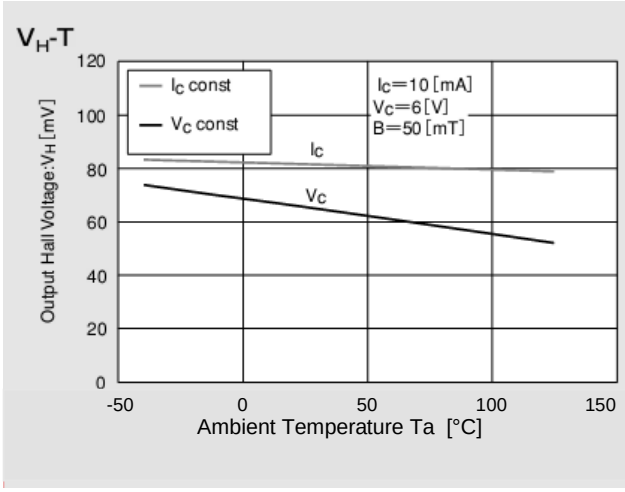

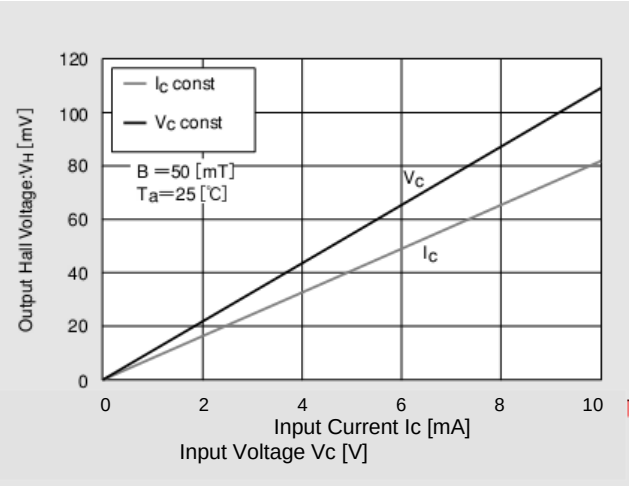

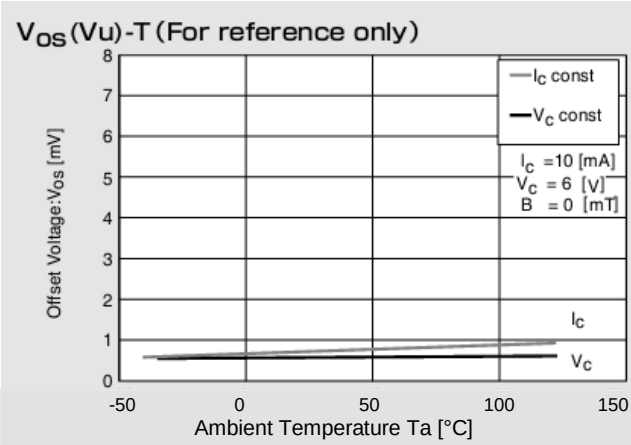

Magnetic Flux Density 1mT = 10G

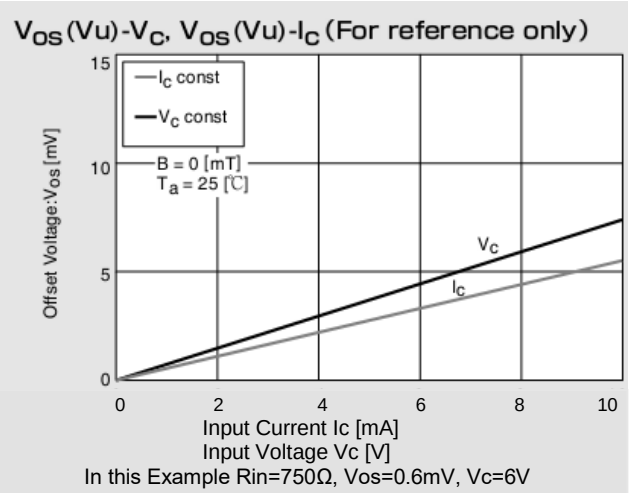

In this Example Rin=750Ω, Vos=0.6mV, Vc=6V

Markt Schwabener Str. 8
85464 Finsing
Germany

Tel.: +49 (0)8121-2574100
Fax: +49 (0)8121-2574101
Email: info@chenyang-gmbh.com
http://www.chenyang-gmbh.com

Connection

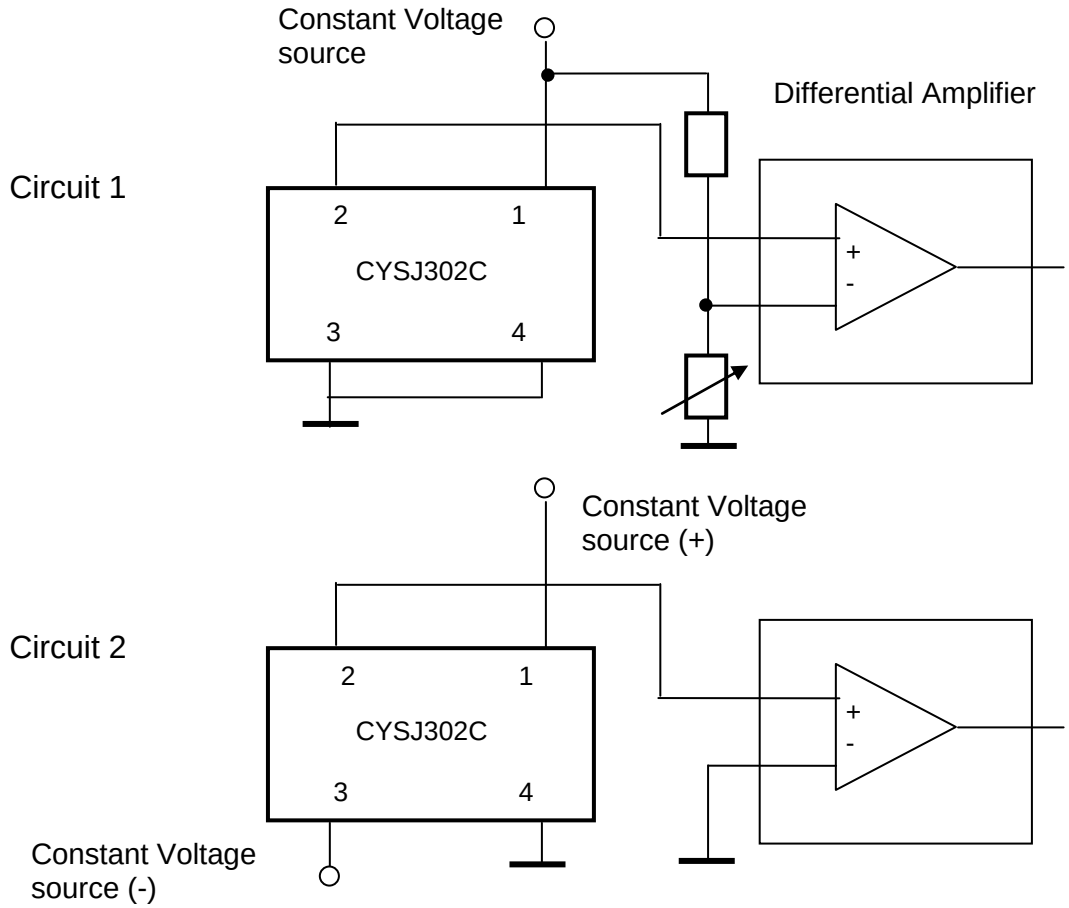

Application Notes

The Hall voltage V_H can be positive and negative. But if one connects the sensor as follows (circuit 1):

Pin 1:	positive input voltage V+, for instance +5VDC.
Pin 3:	GND
Pin 2:	OUTPUT
Pin 4:	GND

One can only measure the positive voltage at the pin 2. This means that the output voltage at zero magnetic field is not zero. This voltage is called as offset voltage. The output voltage in this case is not equal to the Hall voltage. The output voltage is equal to the sum of offset voltage and Hall voltage.

The offset voltage will be zero if you connect double power supplies V+ and V- to the sensor (circuit 2):

Pin 1:	positive input voltage V+, for instance +5VDC.
Pin 3:	negative input voltage V-, for instance -5VDC
Pin 2:	OUTPUT
Pin 4:	GND

In this case the output voltage is equal to the Hall Voltage.

CYSJ362A GaAs HALL-EFFECT ELEMENTS

CYSJ362A series Hall-effect element is a ion-implanted magnetic field sensor made of mono-crystal gallium arsenide (GaAs) semiconductor material group III-V using ion-implanted technology. It can convert a magnetic flux density signal linearly into voltage output.

FEATURES

- High Linearity
- Superior Temperature Stability
- Miniature Package
- Replacements of **THS119**, **KSY14** and **KSY44** etc.

TYPICAL APPLICATION

- Magnetic Field Measurement
- DC Brushless Motor
- Current Sensor
- Non-contact Switch
- Position Control
- Detection of Revolution

BLOCK DIAGRAM

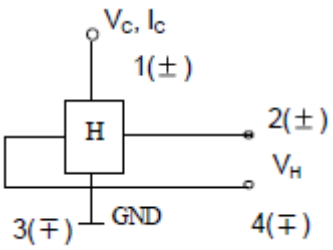

ABSOLUTE MAXIMUM RATING

Parameter	Symbol	Value	Unit
Max. Input Voltage	V_C	12V	mA/V
Max. Input Power	P_D	150	mW
Operating temperature range	T_A	-40~125	°C
Storage temperature range	T_S	-55~150	°C
MTBF (Mean Time Before Failure)		>100k	hour

ELECTRICAL CHARACTERISTICS (T_A=25°C)

Parameter	Symbol	Test conditions	Value	Unit
Hall output voltage	V_H	B=100mT, V_C=6V	156~204	mV
Offset voltage	Vos(Vu)	IV_C=6V, B=0	±8	mV
Input resistance	R_{in}	B=0mT, I_C=0.1mA	1000~1500	Ω
Output resistance	R_{out}	B=0mT, I_C=0.1mA	1800~3000	Ω
Temperature coefficient of Hall output voltage	αV_H	I_C=1mA , B=100mT (Ta=25°C ~ 125°C)	-0.06	%/°C
Temperature coefficient of input resistance	αR_{in}	I_C=0.1mA , B=0mT (Ta=25°C ~ 125°C)	0.3	%/°C
Linearity	ΔK_H	I_C=1mA B=0.1/0.5T	2	%

Notes: V_H=VHM-V_{OS}(V_u) (VHM: meter indication)

$$\alpha V_H = \frac{1}{V_H(T_1)} x \frac{V_H(T_2)-V_H(T_1)}{T_2-T_1} x100 ,$$

$$\alpha R_{in} = \frac{1}{R_{in}(T_1)} x \frac{R_{in}(T_2)-R_{in}(T_1)}{T_2-T_1} x100$$

$$\Delta K_H = \frac{K(B_1)-K(B_2)}{[K(B_1)+K(B_2)]} x200$$

$$K_H = \frac{V_H}{I_C B}$$

T_1=25°C, T_2=125°C, B_1=0.5T, B_2=0.1T

Markt Schwabener Str. 8
85464 Finsing
Germany

Tel.: +49 (0)8121-2574100
Fax: +49 (0)8121-2574101
Email: info@chenyang-gmbh.com
http://www.chenyang-gmbh.com

Package Outline Drawing (Unit: mm)

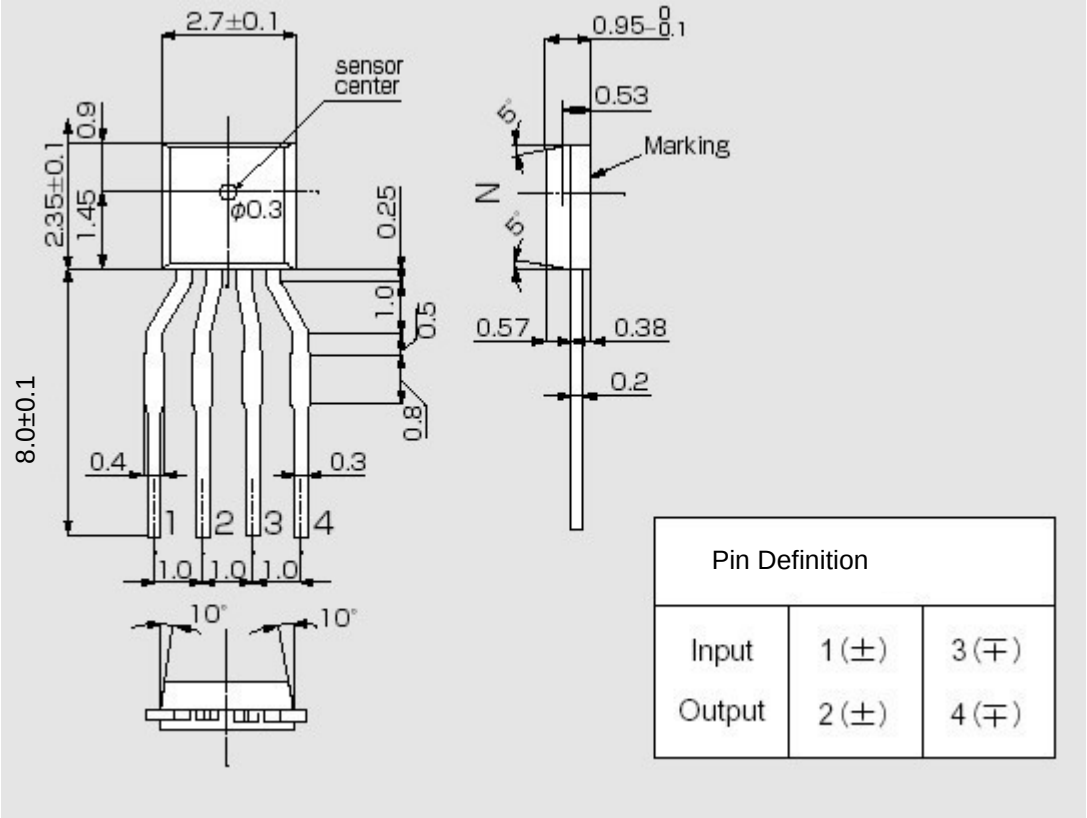

Pin Definition		
Input	1 (±)	3 (∓)
Output	2 (±)	4 (∓)

Characteristic Curves

Allowable Package Power Dissipation

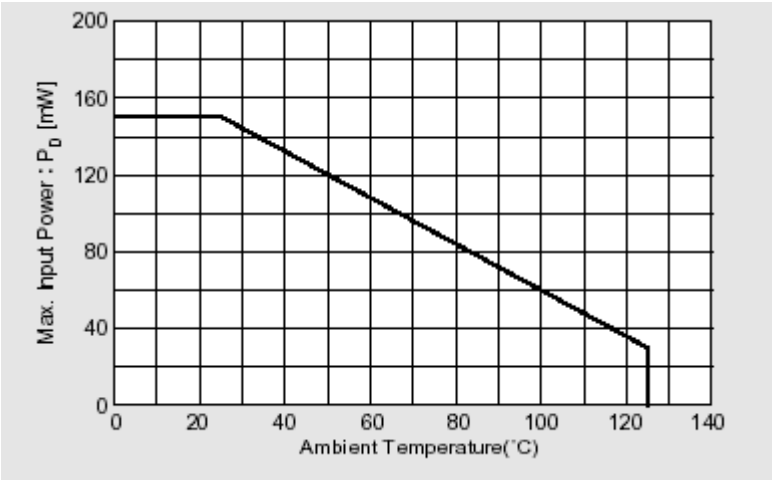

Markt Schwabener Str. 8
85464 Finsing
Germany

Tel.: +49 (0)8121-2574100
Fax: +49 (0)8121-2574101
Email: info@chenyang-gmbh.com
http://www.chenyang-gmbh.com

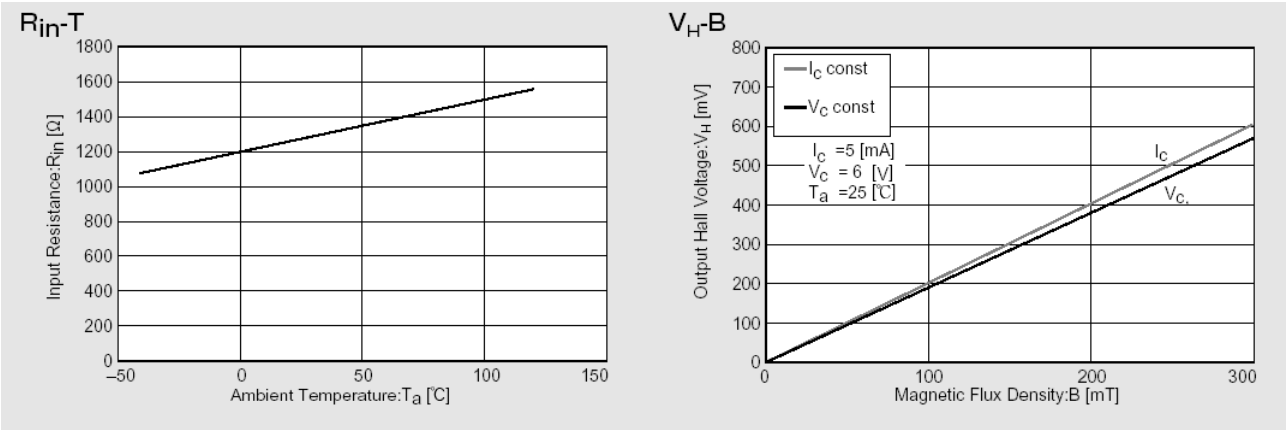

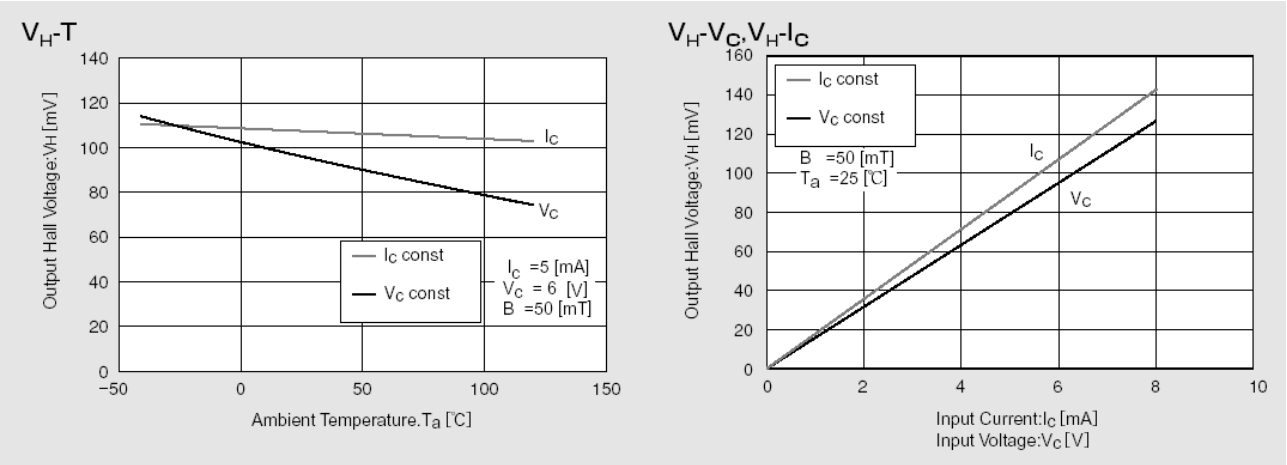

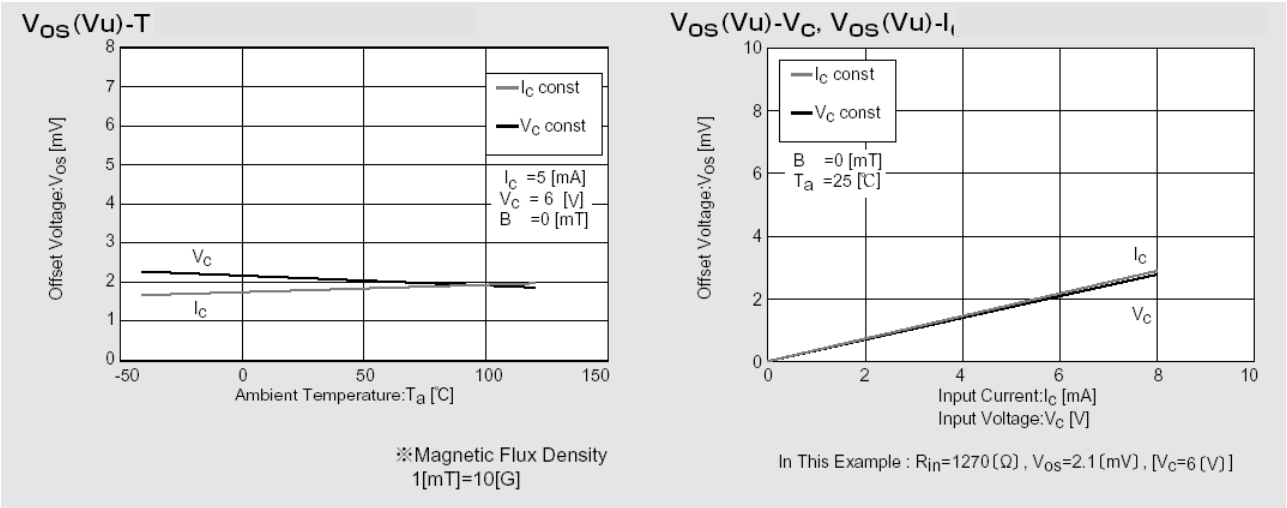

Markt Schwabener Str. 8
85464 Finsing
Germany

Tel.: +49 (0)8121-2574100
Fax: +49 (0)8121-2574101
Email: info@chenyang-gmbh.com
http://www.chenyang-gmbh.com

Connection

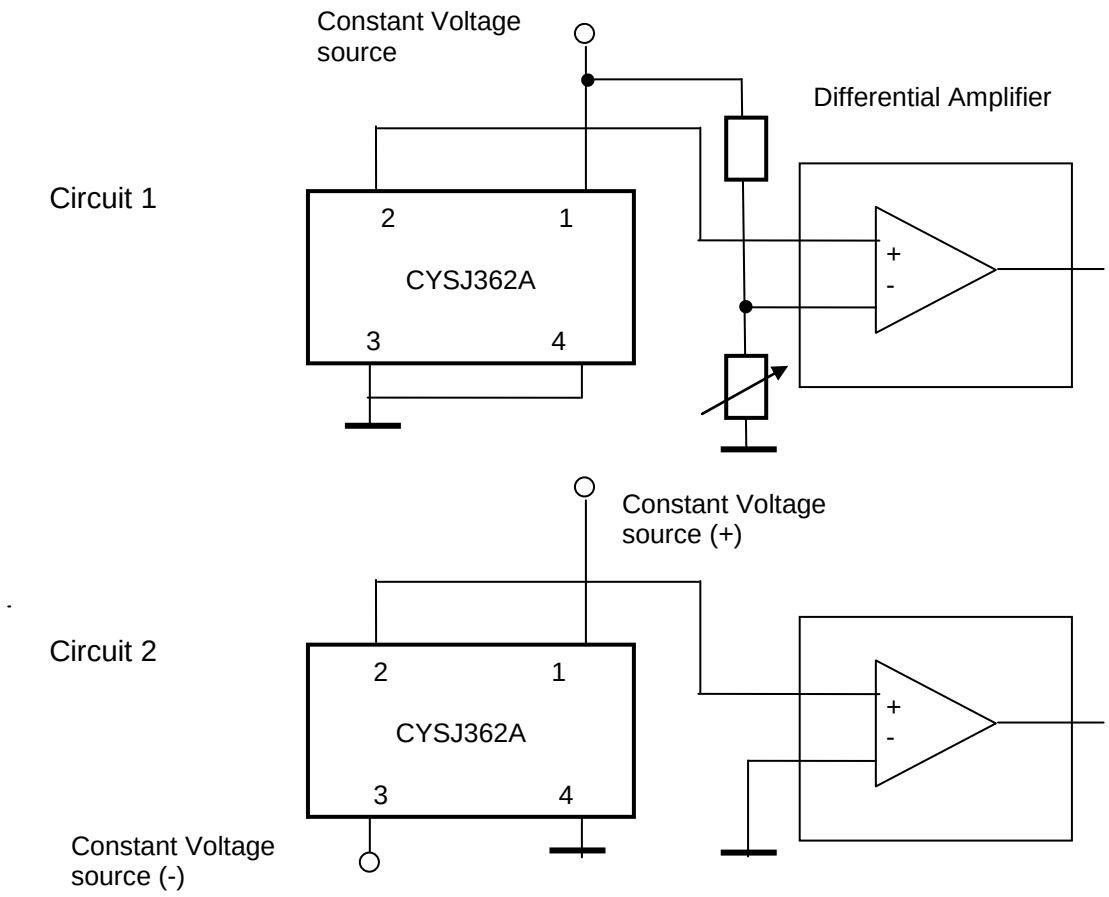

Application Notes

The Hall voltage V_H can be positive and negative. But if one connects the sensor as follows (circuit 1):

Pin 1:	positive input voltage V+, for instance +5VDC.
Pin 3:	GND
Pin 2:	OUTPUT
Pin 4:	GND

One can only measure the positive voltage at the pin 2. This means that the output voltage at zero magnetic field is not zero. This voltage is called as offset voltage. The output voltage in this case is not equal to the Hall voltage. The output voltage is equal to the sum of offset voltage and Hall voltage.

The offset voltage will be zero if you connect double power supplies V+ and V- to the sensor (circuit 2):

Pin 1:	positive input voltage V+, for instance +5VDC.
Pin 3:	negative input voltage V-, for instance -5VDC
Pin 2:	OUTPUT
Pin 4:	GND

In this case the output voltage is equal to the Hall Voltage.

CYTHS124 GaAs HALL-EFFECT ELEMENTS

CYTHS124 Hall-effect element is a ion-implanted magnetic field sensor made of mono-crystal gallium arsenide (GaAs) semiconductor material group III-V using ion-implanted technology. It can convert a magnetic flux density signal linearly into voltage output.

HIGH STABILITY MOTOR CONTROL.

DIGITAL TACHOMETER.

CRANK SHAFT POSITION SENSOR.

- Excellent Temperature Characteristics.
- Wide Operating Temperature Range. (; −55~125°C)
- Excellent Output Voltage Linearity.
- High Internal Resistance. : $R_d = 1000\Omega$ (Min.)
- Low Residual Voltage Ratio. : $V_{HO}/V_H = \pm 5\%$ (Max.)

Unit in mm

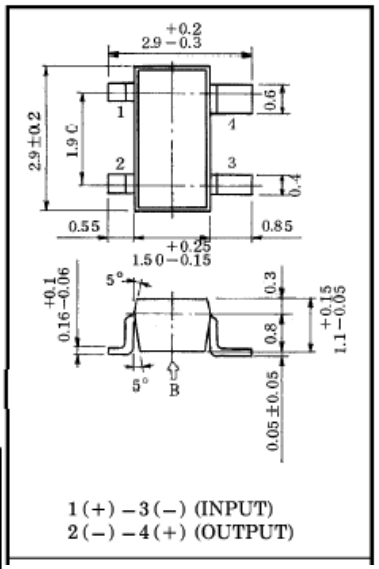

Unit weight: 0.013g

MAXIMUM RATINGS (Ta = 25°C)

CHARACTERISTIC	SYMBOL	RATING	UNIT
Control Voltage	V_C	12	V
Power Dissipation	P_D	150	mW
Operating Temperature Range	T_{opr}	−55~125	°C
Storage Temperature Range	T_{stg}	−55~150	°C

ELECTRICAL CHARACTERISTICS (Ta = 25°C)

CHARACTERISTIC	SYMBOL	TEST CONDITION	MIN.	TYP.	MAX.	UNIT
Internal Resistance (Input)	R_d	$I_C = 1mA$	1000	1250	1500	Ω
Residual Voltage Ratio	V_{HO}/V_H	$V_C = 5V$, $B = 0/B = 0.1T$	—	—	±5	%
Hall Voltage (Note 1)	V_H	$V_C = 5V$, $B = 0.1T$	130	150	170	mV
Temperature Coefficient (Note 2)	V_{HT}	$I_C = 5mA$, $B = 0.1T$ $T1 = 25°C$, $T2 = 125°C$	—	—	−0.06	%/°C
Linearity (Note 3)	ΔK_H	$V_C = 5V$, $B1 = 0.05T$, $B2 = 0.1T$	—	—	2	%
Specific Sensitivity (Note 4)	K^*	$V_C = 5V$, $B = 0.1T$	—	30	—	$\times 10^{-2}/T$
Internal Resistance (Output)	R_{OUT}	$I_C = 1mA$	1800	2375	3000	Ω

Note 1 : $V_H = V_{HM} - V_{HO}$ (V_{HM} is meter indication)

Note 2 : $V_{HT} = \frac{1}{V_{H(T1)}} \cdot \frac{V_{H(T2)} - V_{H(T1)}}{T2 - T1} \times 100\ (\%/°C)$ V_{HO} : Residual Voltage

Note 3 : $\Delta K_H = \frac{K_{H(B2)} - K_{H(B1)}}{1/2\{K_{H(B1)} + K_{H(B2)}\}} \times 100\ (\%)$, $K_H = \frac{V_H}{I_C \cdot B}$ K_H : Product Sensitivity

Note 4 : $K^* = V_H/(R_d \times I_C \times B) = K_H/R_d$

Markt Schwabener Str. 8
85464 Finsing
Germany

Tel.: +49 (0)8121-2574100
Fax: +49 (0)8121-2574101
Email: info@chenyang-gmbh.com
http://www.chenyang-gmbh.com

Characteristic Curves

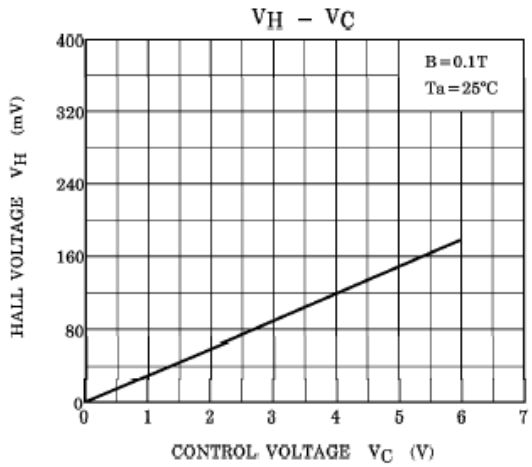

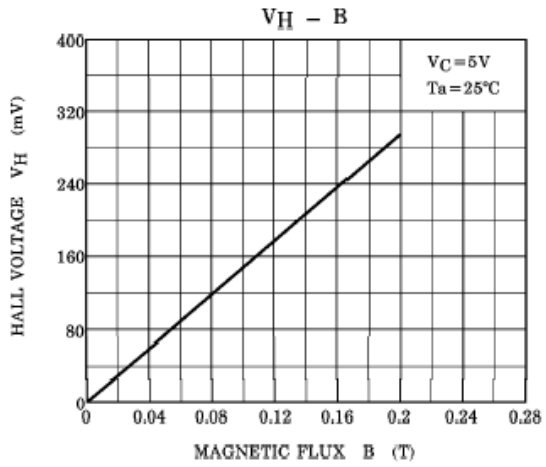

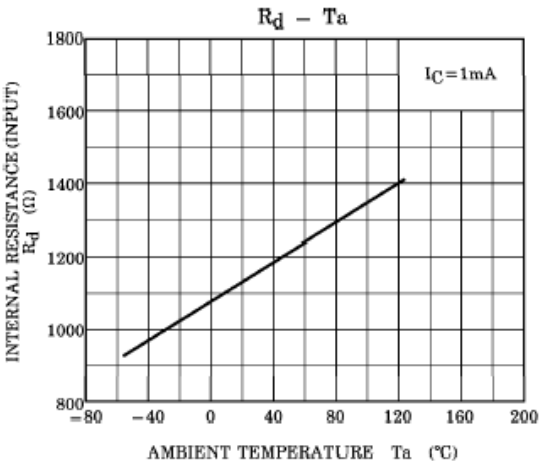

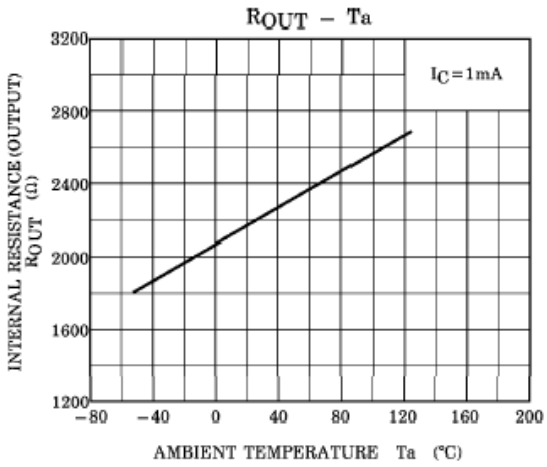

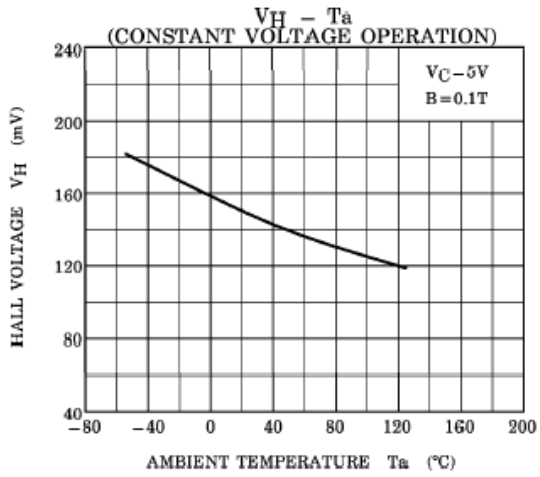

Markt Schwabener Str. 8
85464 Finsing
Germany

Tel.: +49 (0)8121-2574100
Fax: +49 (0)8121-2574101
Email: info@chenyang-gmbh.com
http://www.chenyang-gmbh.com

Connection

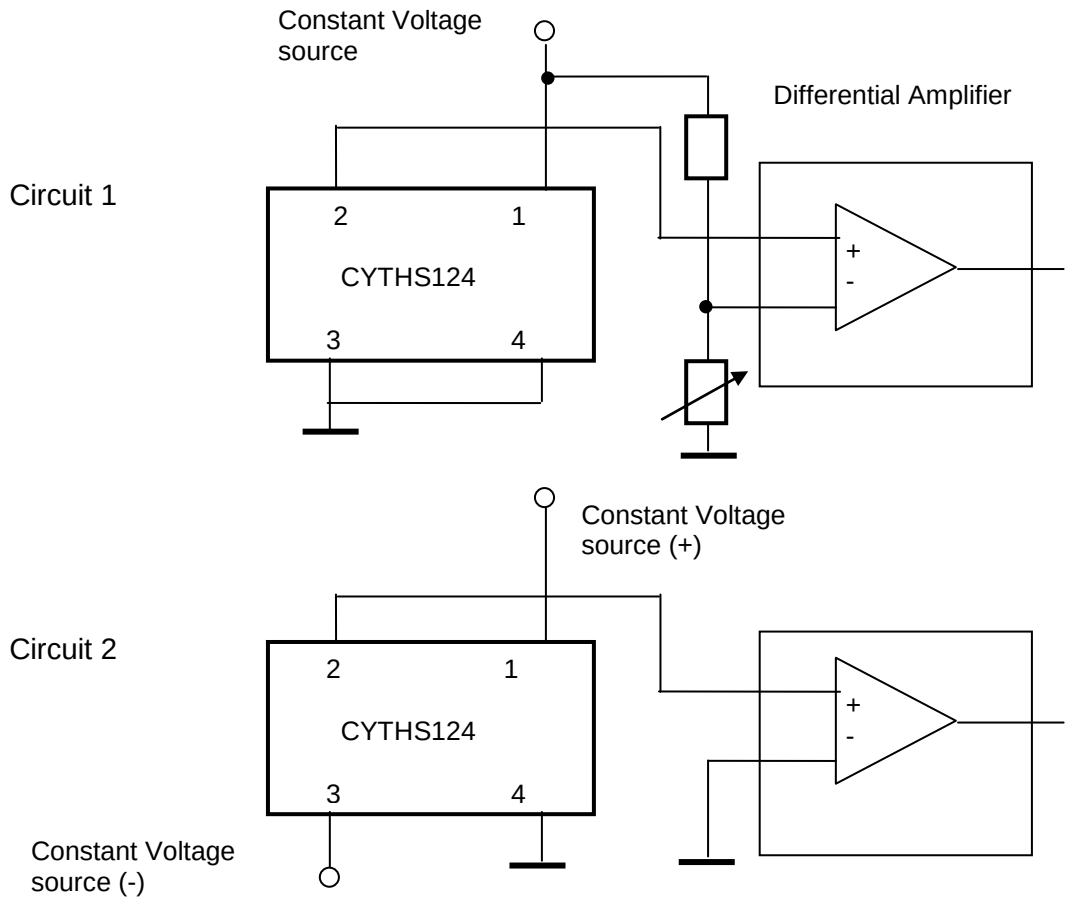

Application Notes

The Hall voltage V_H can be positive and negative. But if one connects the sensor as follows (circuit 1):

Pin 1: positive input voltage V+, for instance +5VDC.
Pin 3: GND
Pin 2: OUTPUT
Pin 4: GND

One can only measure the positive voltage at the pin 2. This means that the output voltage at zero magnetic field is not zero. This voltage is called as offset voltage. The output voltage in this case is not equal to the Hall voltage. The output voltage is equal to the sum of offset voltage and Hall voltage.

The offset voltage will be zero if you connect double power supplies V+ and V- to the sensor (circuit 2):

Pin 1: positive input voltage V+, for instance +5VDC.
Pin 3: negative input voltage V-, for instance -5VDC
Pin 2: OUTPUT
Pin 4: GND

In this case the output voltage is equal to the Hall Voltage.

CYSJ902 GaAs Hall Effect Element

CYSJ902 series Hall-effect element is a ion-implanted magnetic field sensor made of mono-crystal gallium arsenide (GaAs) semiconductor material group III-V using ion-implanted technology. It can convert a magnetic flux density signal linearly into voltage output.

FEATURES

- High Linearity
- Superior Temperature Stability
- Miniature Package
- Replacements of **THS119**, **KSY14** and **KSY44** etc.

TYPICAL APPLICATION

- Magnetic Field Measurement
- DC Brushless Motor
- Current Sensor
- Non-contact Switch
- Position Control
- Detection of Revolution

BLOCK DIAGRAM

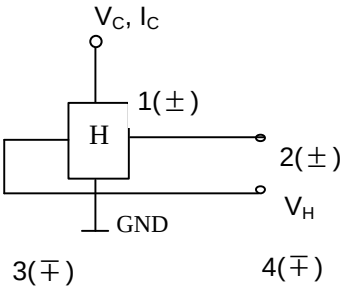

ABSOLUTE MAXIMUM RATING (Table 1.)

Parameter	Symbol	Value		Unit
Max. Input Current (Voltage)	Ic (Vc)	13 (12)		mA (V)
Operating temperature range	T_A	CYSJ902S / CYSJ902SS	CYSJ902H	°C
		-40~125	-55~150	
Storage temperature range	T_S	-45~150	-55~150	°C
MTBF (Mean Time Between Failures)		>100k		hour

ELECTRICAL CHARACTERISTICS (T_A=25°C)

Table 2. Electrical Characteristics of CYSJ902

Parameter	Symbol	Test conditions	Value		Unit
Hall output voltage	V_H	B=50mT, I_C=5mA	36~54		mV
Offset voltage	Vos(Vu)	I_C=5mA, B=0	CYSJ902S/CYSJ902H	CYSJ902SS	mV
			±5	±2	
Input resistance	R_{in}	B=0mT, I_C=0.1mA	650~850		Ω
Output resistance	R_{out}	B=0mT, I_C=0.1mA	650~850		Ω
Temperature coefficient of Hall output voltage	αV_H	I_C=5mA , B=50mT (Ta=25°C ~ 125°C)	-0.06		%/°C
Temperature coefficient of input resistance	αR_{in}	I_C=0.1mA , B=0mT (Ta=25°C ~ 125°C)	0.3		%/°C
Linearity	ΔK_H	I_C=5mA B=0.1~0.4T	±1.0		%

Notes: $V_H=V_{HM}-V_{OS}(V_u)$ (V_{HM}: measured voltage)

$$\alpha V_H = \frac{1}{V_H(T_1)} x \frac{V_H(T_2)-V_H(T_1)}{T_2-T_1} x100 ,$$

$$\alpha R_{in} = \frac{1}{R_{in}(T_1)} x \frac{R_{in}(T_2)-R_{in}(T_1)}{T_2-T_1} x100$$

$$\Delta K_H = \frac{K(B_1)-K(B_2)}{[K(B_1)+K(B_2)]} x200$$

$$K_H = \frac{V_H}{I_C B}$$

T_1=25°C, T_2=125°C, B_1=0.4T, B_2=0.1T

Markt Schwabener Str. 8
85464 Finsing
Germany

Tel.: +49 (0)8121-2574100
Fax: +49 (0)8121-2574101
Email: info@chenyang-gmbh.com
http://www.chenyang-gmbh.com

Package Outline Drawing (Unit: mm)

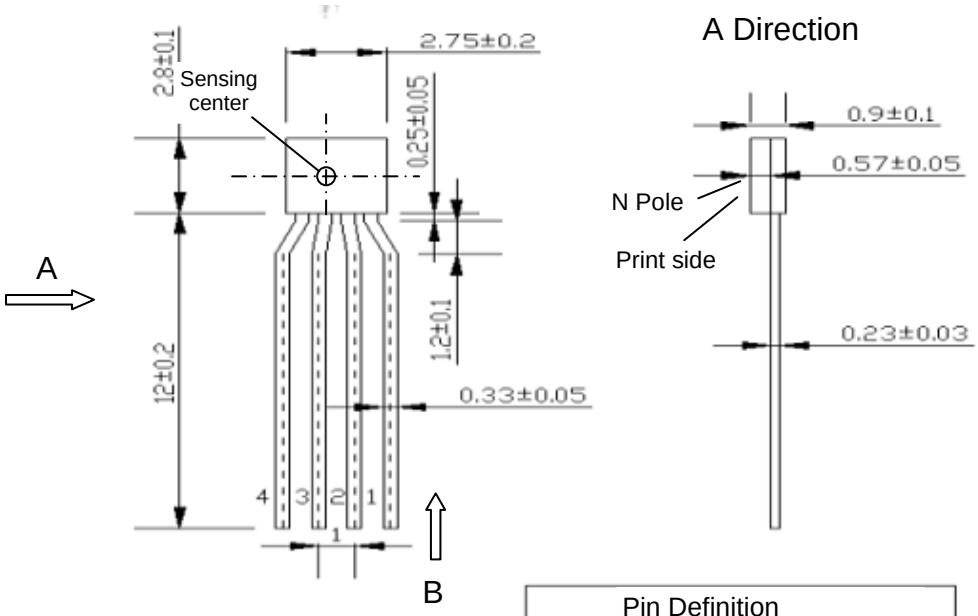

Pin Definition		
Input	1 (+/-)	3 (-/+)
Output	2 (+/-)	4 (-/+)

Characteristic Curves

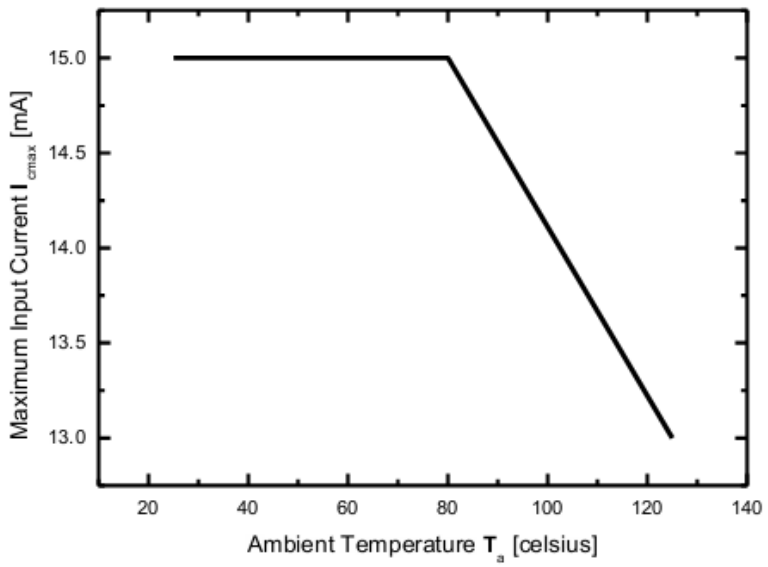

Figure 1. Maximum Input Current I_{cmax}

Markt Schwabener Str. 8
85464 Finsing
Germany

Tel.: +49 (0)8121-2574100
Fax: +49 (0)8121-2574101
Email: info@chenyang-gmbh.com
http://www.chenyang-gmbh.com

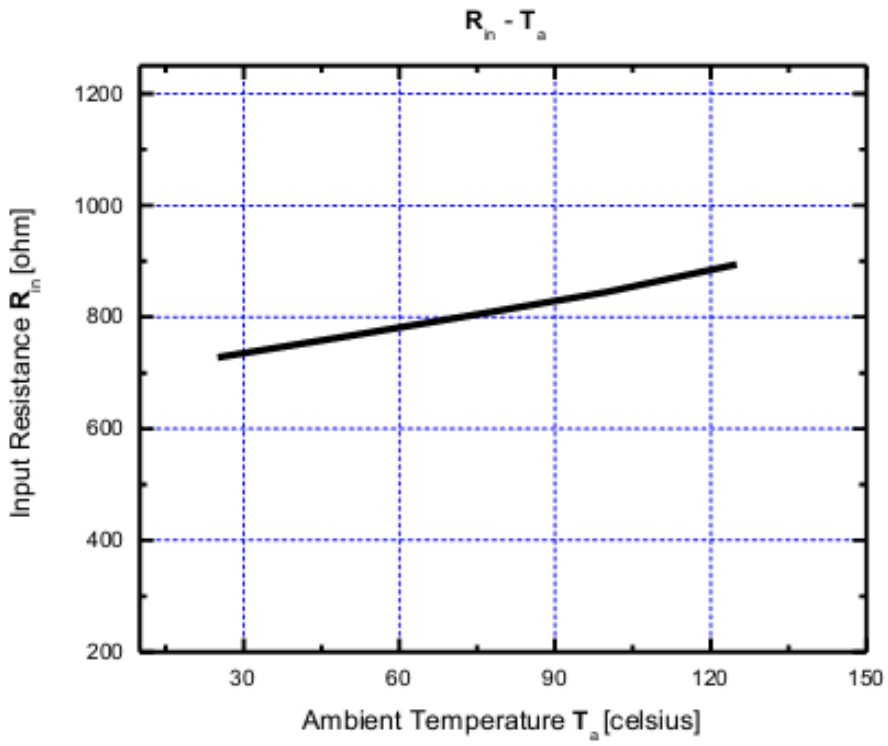

Figure 2. Input resistance Rin as a function of ambient temperature Ta

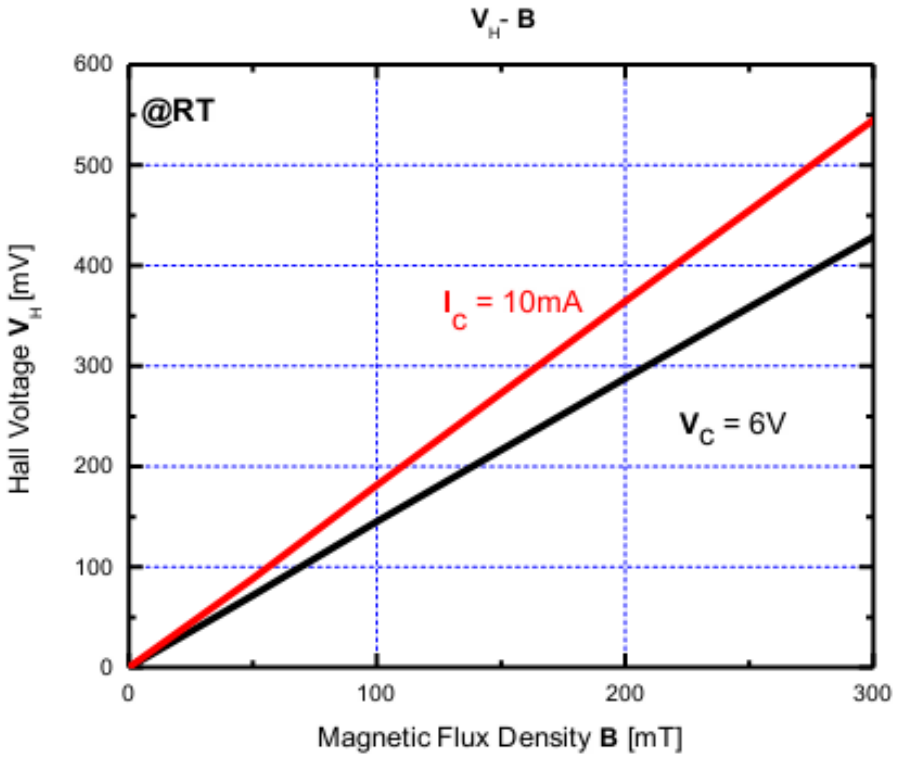

Figure 3. Hall voltage ***VH*** as a function of magnetic flux density ***B*** .

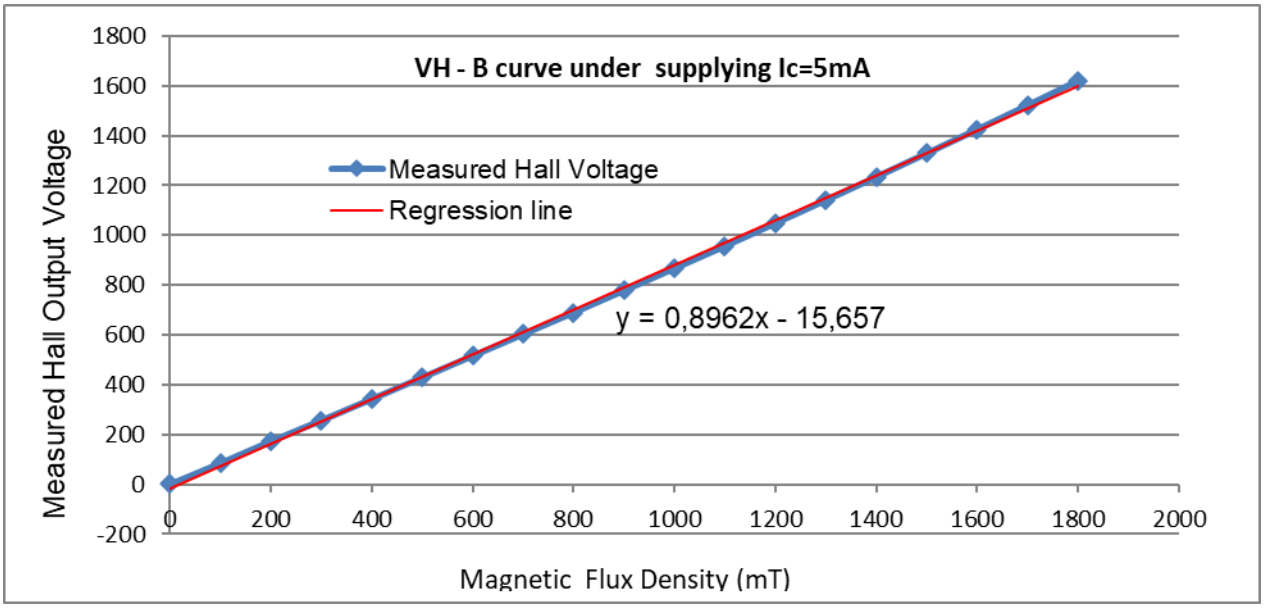

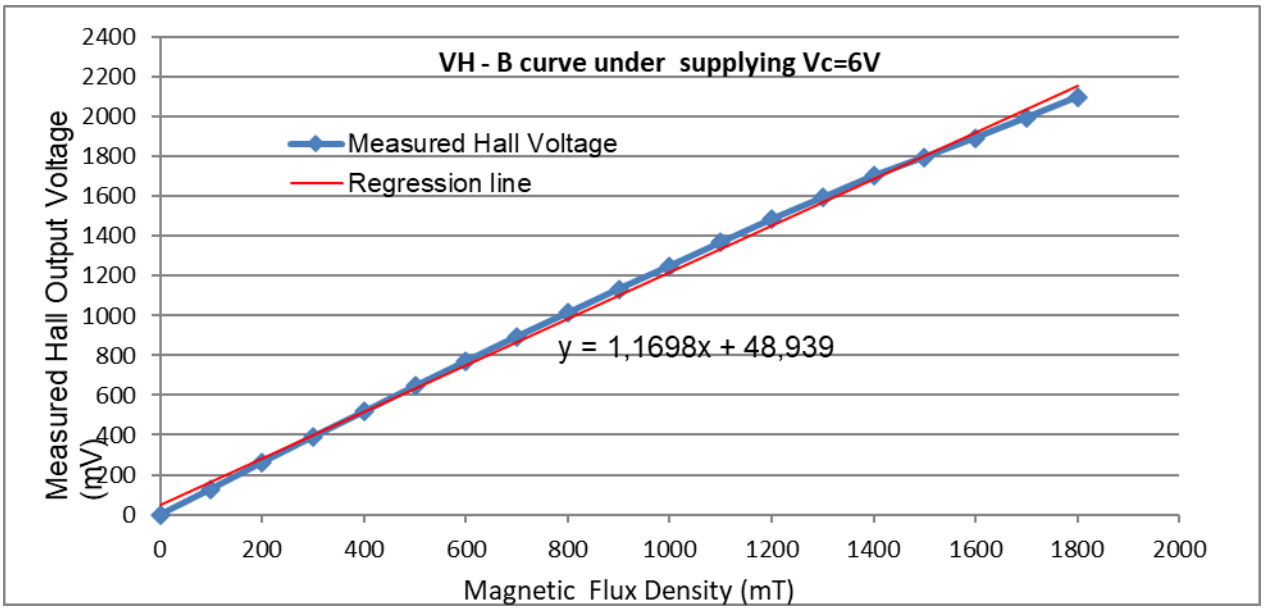

Figure 4. Hall voltage ***VH*** as a function of magnetic flux density ***B*** (0 -1800mT) .

Table 3. Linearity of CYSJ902 in different ranges

Measuring range	**0-500mT**	**0-1000mT**	**0-1500mT**	**0-1800mT**
Under supplying 5mA	-0.18% ~ 0.08%	-0.25% ~ 0.40%	-0.60% ~ 1.10%	-0.85% ~ 1.5%
Under supplying 6V	-0.25% ~ 0.45%	-1.15% ~ 0.70%	-2.20% ~ 1.15%	-2.65% ~ 1,50%

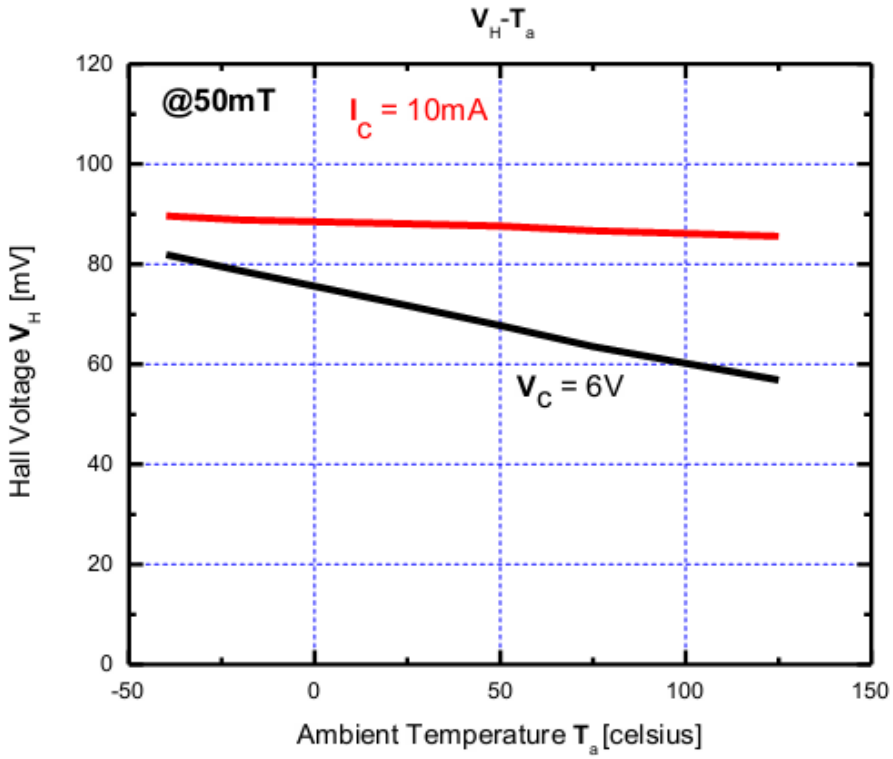

Figure 4. Hall voltage***VH*** as a function ofambient temperature***Ta***

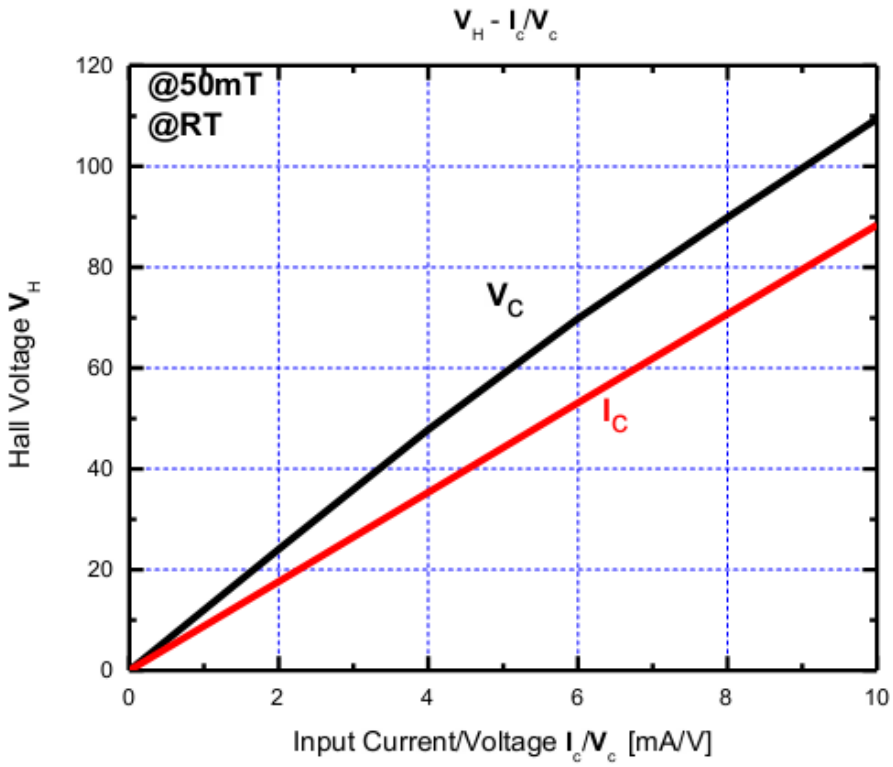

Figure 5. Hall voltage***VH*** as a function ofelectrical stimuli ***Ic***/ ***Vc.***

Connection

Circuit 1

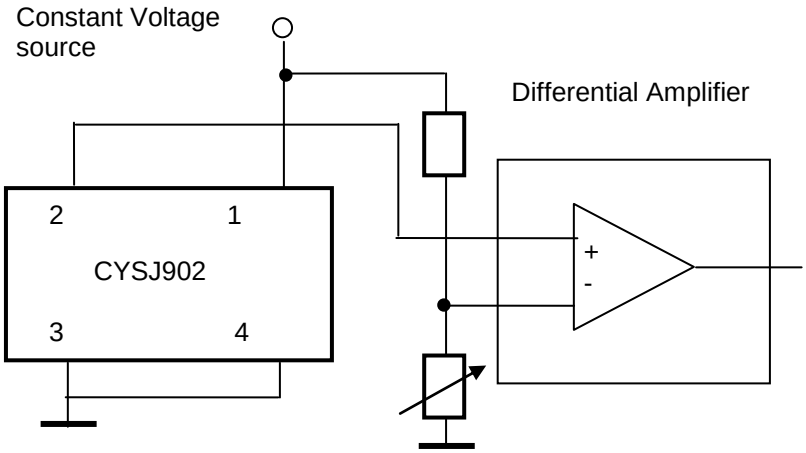

Circuit 2

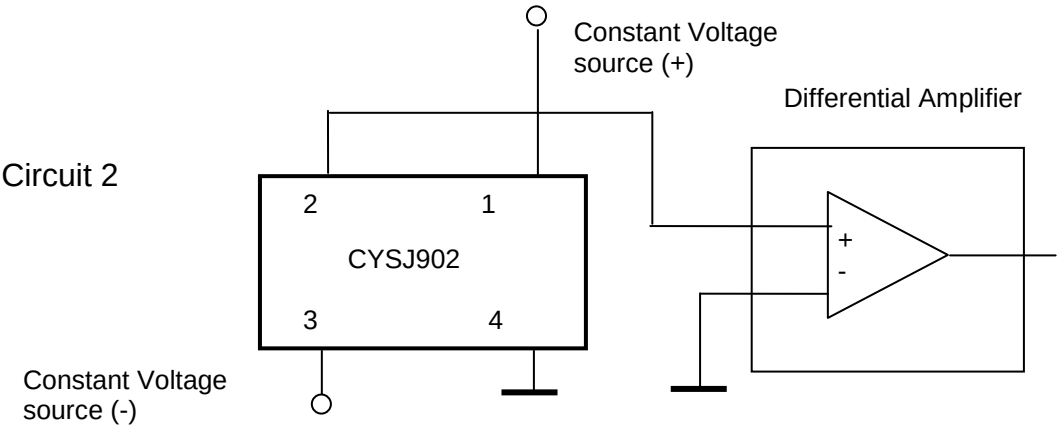

Application Notes

The Hall voltage V_H can be positive and negative. But if one connects the sensor as follows (circuit 1):

Pin 1:	positive input voltage V+, for instance +5VDC.
Pin 3:	GND
Pin 2:	OUTPUT
Pin 4:	GND

One can only measure the positive voltage at the pin 2. This means that the output voltage at zero magnetic field is not zero. This voltage is called as offset voltage. The output voltage in this case is not equal to the Hall voltage. The output voltage is equal to the sum of offset voltage and Hall voltage.

The offset voltage will be zero if you connect double power supplies V+ and V- to the sensor (circuit 2):

Pin 1:	positive input voltage V+, for instance +5VDC.
Pin 3:	negative input voltage V-, for instance -5VDC
Pin 2:	OUTPUT
Pin 4:	GND

In this case the output voltage is equal to the Hall Voltage.

Reliability Test Terms

Table 4. Reliability Test Terms, Conditions and Durations.

Item	Terms	Conditions	Duration
1	High Temperature Storage(HTS)	[JEITA EIAJ ED-4701] Ta=150(0~10)°C	1000h
2	Heat Cycle (HC)	[JEITA EIAJ ED-4701] Ta=-55°C~150°C high temp. - normal temp. - low temp. 30 min - 5 min - 30 min	50cycles
3	Temp. Humidity Storage (THS)	[JEITA EIAJ ED-4701] Ta =85±3°C，RH =85±5 %	1000h
4	Resist. to Hand Soldering Heat (RHSH)	[JEITA EIAJ ED-4701] Dipped in the 300±5°C. solder up to the 1 mm part from the body	5 sec
5	High Temp. Operating(HTO)	Ta =125°C, Vc =7.5V	1000h

Criteria:

- Variation of Hall Voltage V_H and input/output resistances Rin /Rout are less than 20%.
- Variation of offset voltage Vos is less than 1mV.
- Other parameters in Table 2 are still within their ranges stated in Table 2.

Soldering Conditions

The following conditions should be preserved. Solder ability should be checked by yourself, because it is depend on solder paste material and other parameters.

Material of solder flux

Use the resin-based flux and refrain from using organic or inorganic acid based and water-soluble one.

Cleansing of solder flux conditions

- Use Ethanol or Isopropyl alcohol as cleansing material.
- Process temperature should be 50℃ or less.
- Duration should be 5 min or less.

Hand soldering conditions

- Apart from the mold resin more than 1mm.
- Solder at temperature 300℃ for less than 5s.

Wave soldering conditions

- Temperature in Pre-heating zone should be lower than 150℃.
- Temperature in Soldering zone should be lower than 280℃.

Precautions for ESD

This product is the device that is sensitive to ESD (Electrostatic Discharge). Handling Hall Elements with the ESD-Caution mark under the environment in which
- Static electrical charge is unlikely to arise. (Ex; Relative Humidity; over 40%RH).

- Wearing the antistatic suit and wristband when handling the devices.
- Implementing measures against ESD as for containers that directly touch the devices.

Precautions for Storage

- Products should be stored at an appropriate temperature and humidity (5 to 35°C, 40 to 60% RH) after the unsealing of MBB. Using self-sealer is highly recommended for keeping products away from chlorine and corrosive gas.
- Long-term storage
  Products are sealed in MBB with a desiccant and a moisture indicator. The moisture indicator should be checked right after the unsealing of MBB. If the moisture indicator reveals the internal moisture is above 50%HR, please contact the local distributor.
- For storage longer than 2 years, it is recommended to store in nitrogen atmosphere with MBB sealed. Oxygen and H2O of atmosphere oxidizes leads of products and lead solder ability gets worse.

Precautions for Safety

- Do not alter the form of this product into a gas, powder or liquid through burning, crushing or chemical processing.
- Observe laws and company regulations when discarding this product.

Order Information

Part Number	Operating Temperature	Offset Voltage	Package	MOQ
CYSJ902S	-40°C ~ 125°C	±5mV	SIP/2.75x2.8x0.9mm	500ea or 1000ea
CYSJ902SS	-40°C ~ 125°C	±2mV		
CYSJ902H	-55°C ~ 150°C	±5mV		

InSb Hall Effect Elements (Analog Output)

CYSH12AF (InSb) HALL-EFFECT ELEMENT

Hall-effect element CYSH12AF is made of compound semiconductor material indium stibnite (InSb), which utilizes the Hall-effect principle. It can convert a magnetic flux density signal linearly into voltage output. It is new generation of Hall Effect element CYTY101A.

FEATURES

- High Magnetic Sensitivity
- Low Offset Voltage
- Miniature Package

TYPICAL APPLICATION

- Magnetic Field Measurement
- Current Sensor
- Detection of Speed
- DC Brushless Motor
- Position Control

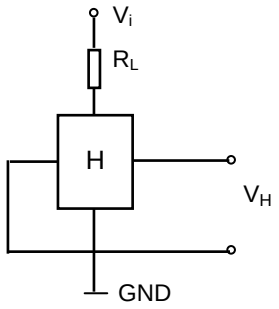

1. Maximum Ratings

(Ta=25°C)

Parameter	Symbol	Rating	Unit
Maximum Input Current	Imax	20 (at 25°C)	mA
Maximum Power Dissipation	Pmax	150 (at 25°C)	mW
Operating Temperature Range	Top	- 40 ~ + 110	°C
Storage Temperature Range	Tst	- 40 ~ + 150	°C

2. Electrical Characteristics (Measured at 25°C)

Parameter	Symbol	Measurement Conditions	Min	Max	Unit
Output Hall Voltage	VH	Vin = 1V, B = 50mT	196	320	mV
Input Resistance	Rin	I = 0.1mA	240	550	Ω
Output Resistance	Rout	I = 0.1mA	240	550	Ω
Offset Voltage	VO	Vin = 1V, B = 0G	- 7	+ 7	mV
Temp. Coeff. of VH	α	Ta = 0 ~ + 40°C AVG. B=50mT, Ic=5mA	-	- 1.8	% /°C
Temp. Coeff. of Rin, Rout	β	Ta = 0 ~ + 40°C AVG. B=0, Ic=0.1mA	-	- 1.8	% /°C

$V_H = V_{HM} - V_O$ (V_{HM} : The output voltage measured at 500G.)

3. Rank Classification and Mark on Output Hall Voltage

Output Hall Voltage,VH (mV)	Rank	Mark	Measurement Conditions
196 ~ 236	D	SD	Vin = 1V, B = 50mT (Constant Voltage)
228 ~ 274	E**	SE	
266 ~ 320	F**	SF	

** As standard sensor we offer our customers the rank E and F

Markt Schwabener Str. 8
85464 Finsing
Germany

Tel.: +49 (0)8121-2574100
Fax: +49 (0)8121-2574101
Email: info@chenyang-gmbh.com
http://www.chenyang-gmbh.com

4. CHARACTERISTIC CURVES (only for references)

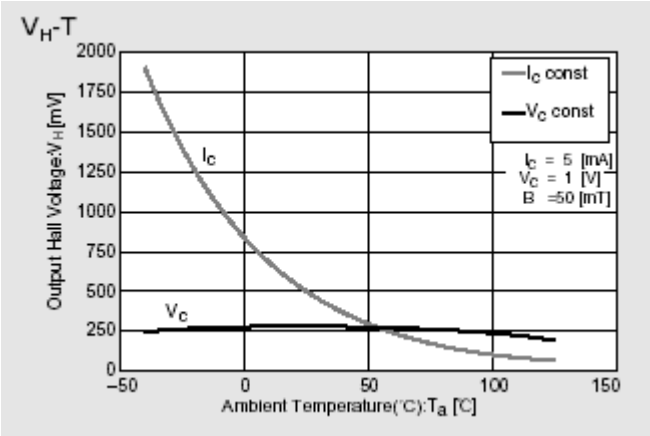

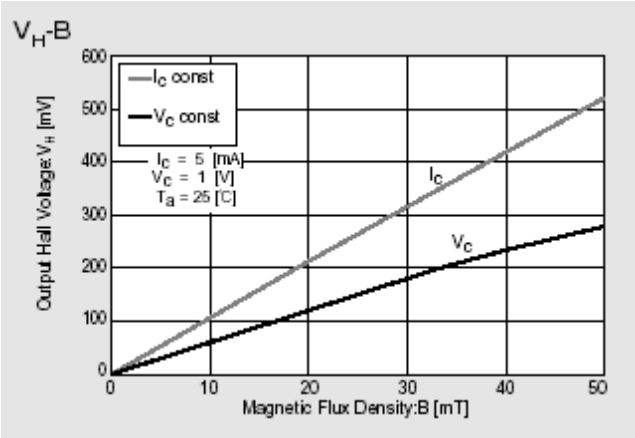

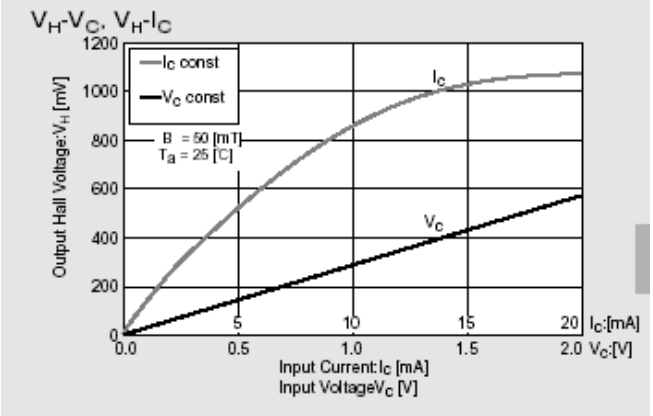

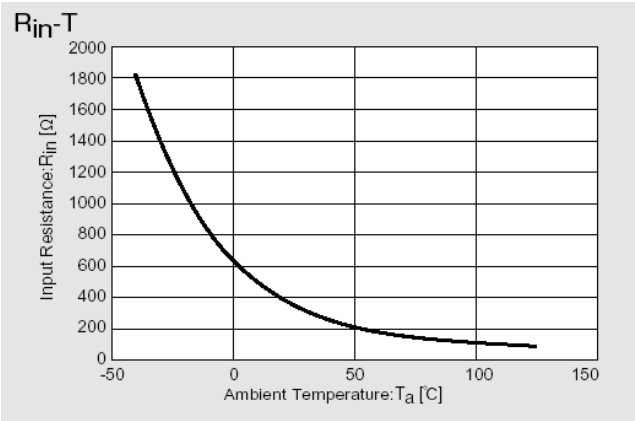

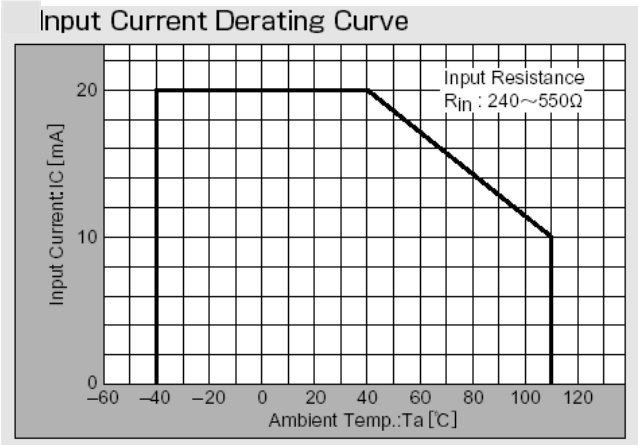

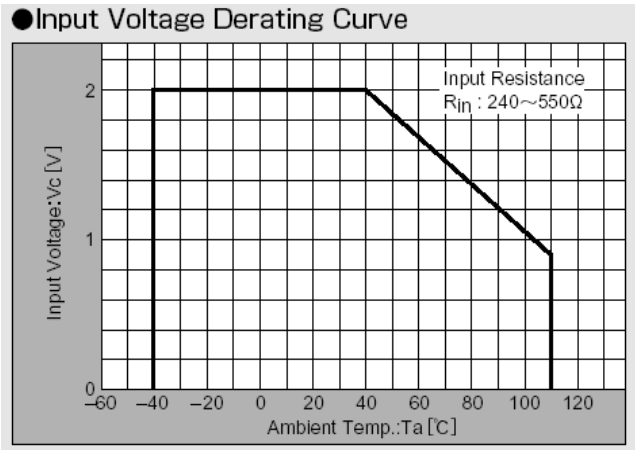

5. Method for Mounting

5-1. Soldering Conditions on PCB

1. No Rapid Heating and Cooling.
2. Recommended Preheating condition is at 150~190°C for 2~3minutes.
3. Recommended Reflowing condition is at 220~230°C for 10~20seconds.

5-2. Soldering Method and Temperature

Items	Methods	Temperature
Reflow	Soldering by Passing the Heated Zone	Max 260°C in 10sec
Solder Iron	Soldering by Soldering Iron	Max 350°C in 3sec

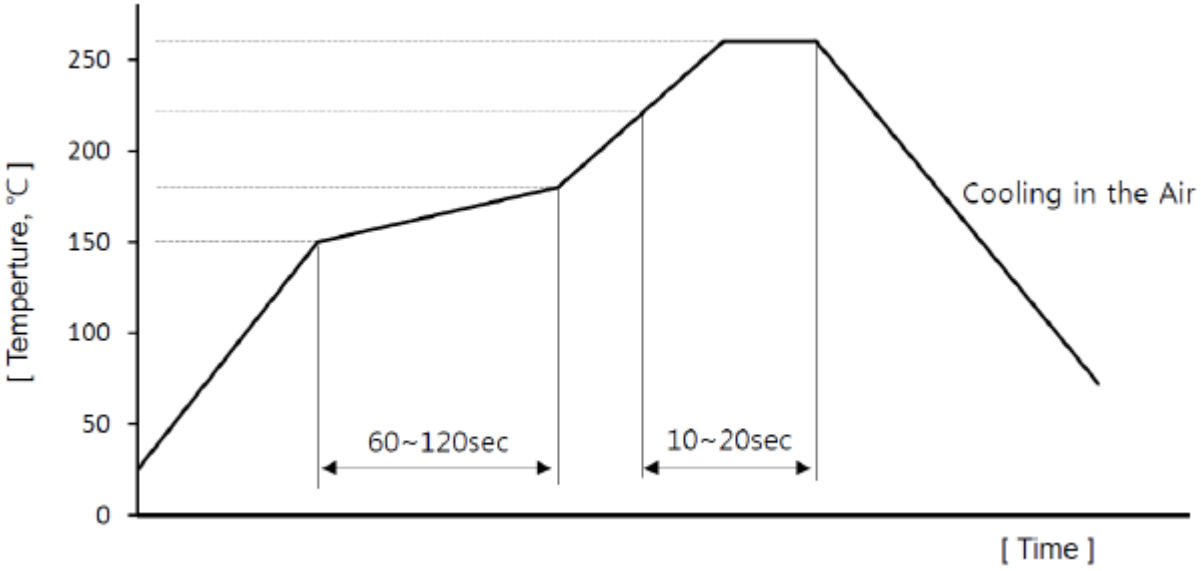

Reflow Method

6. Packaging

6-1. Taping

1. CYSH12AF should be packed that marked side is viewed from cover tape andlong side is pu t parallel with tape running direction. Making use of itafter 180° rotation has no problem beca use of its symmetric mode.
2. The vacant parts more than 40mm are located at front and end side of the reel.

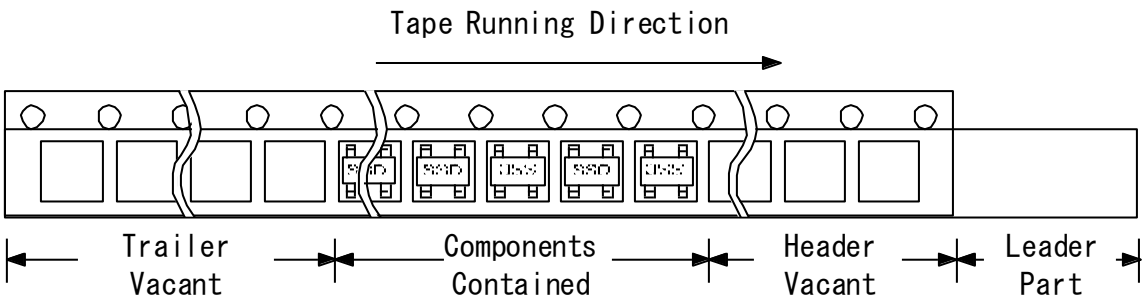

6-2. Tape Specifications

1. Pull Strength(F) = 20~70g

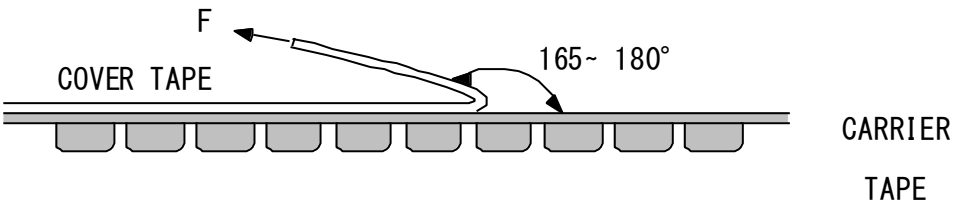

2. Devices should not be flipped out of a pocket when tape is bent down by 15mm curvature.
3. Devices should not be stuck to cover tape.
4. Devices should be kept below 40°C and below RH80% in the shade.
5. Tape has no joint.

6-3. Packing Unit

1. 3,000pcs of devices are packed in one reel.
2. Five reels are packed in one inner box.
3. Four inner boxes, 60,000pcs of devices, are packed in one outer box.
4. Dummy could be packed for safe dealing.

7. External Dimensions (Unit: mm)

Four leads of input and output terminals are designed in the diagonally symmetric mode and are equal in dimensions. Regardless of 180°rotation of Hall sensor, CYSH12AF can be used.

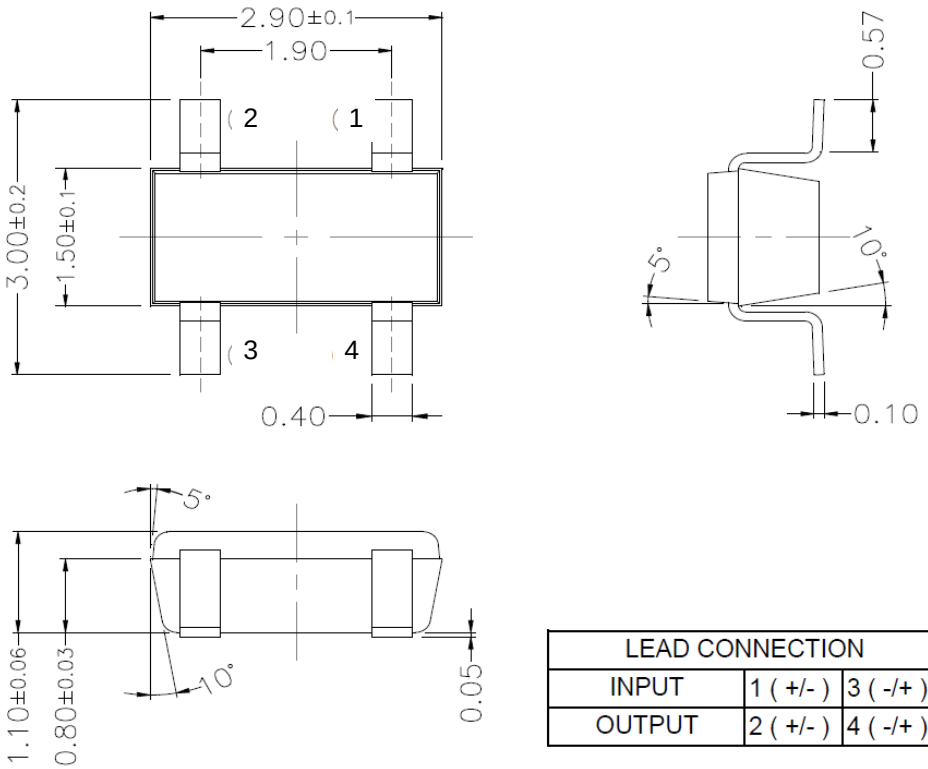

LEAD CONNECTION		
INPUT	1 (+/-)	3 (-/+)
OUTPUT	2 (+/-)	4 (-/+)

Connection

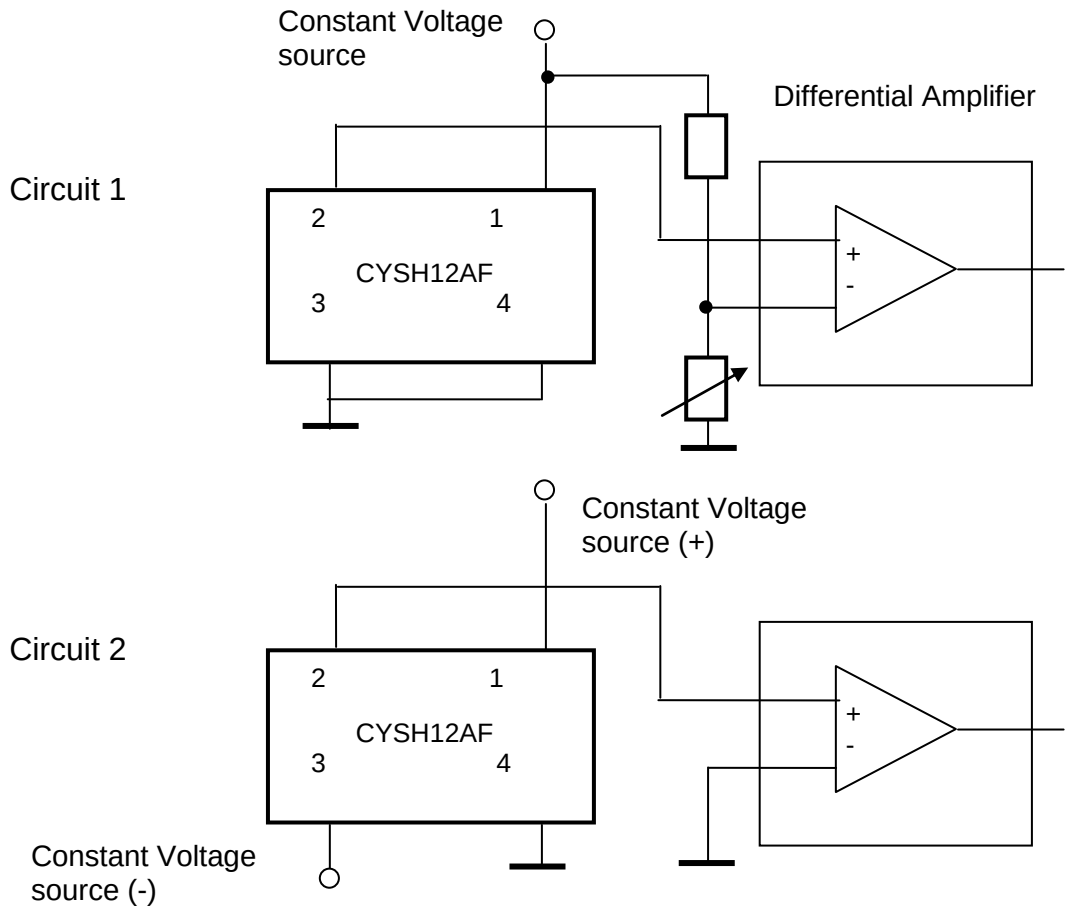

Application Notes

The Hall voltage V_H can be positive and negative. But if one connects the sensor as follows (circuit1):

Pin 1:	positive input voltage V+, for instance +5VDC.
Pin 3:	GND
Pin 2:	OUTPUT
Pin 4:	GND

One can only measure the positive voltage at the pin 2. This means that the output voltage at zero magnetic field is not zero. This voltage is called as offset voltage. The output voltage in this case is not equal to the Hall voltage. The output voltage is equal to the sum of offset voltage and Hall voltage.

The offset voltage will be zero if you connect double power supplies V+ and V- to the sensor (circuit 2):

Pin 1:	positive input voltage V+, for instance +5VDC.
Pin 3:	negative input voltage V-, for instance -5VDC
Pin 2:	OUTPUT
Pin 4:	GND

In this case the output voltage is equal to the Hall Voltage.

8. RELIABILITY

8. 1 TEST CONDITION

	CONDITION
HIGH TEMP. STORAGE	Ta=150°C,t=1000HR
LOW TEMP. STORAGE	Ta=-40°C,t=1000HR
HIGH TEMP. OPERATION	Ta=120°C,Iopr=10mA,t=1000HR
LOW TEMP. OPERATION	Ta=-40°C,Iopr=6mA,t=1000HR
HIGH TEMP. HIGH UMIDITY OPERATION	Ta=85°C, HR=85%,Iopr=9mA,t=1000HR
HUMIDITY	Ta=60°C,HR=90%, t=1000HR
PCT	Ta=121°C,HR=100%, Pv=2atm, t=24HR
THERMAL SHOCK	T(L)=-55°C,T(H)=150°C, t=(L,H)=30min,M=30CYCLE
SOLDERING HEAT RESISTANCE	solder temp=260°C, t=10sec,REFLOW
SOLDABILITY	solder temp=230±5°C, t=5sec,dip
TERMINAL STRENGTH	TENSION 300g/30sec
ESD (MM)	V=500V, C=200pF, R=0Ω (test method EIAJ EDX 8503)

8.2 CRITERION FOR JUDGING

After each reliability test, samples should be kept for at least 24 hrs at room temp. & humidity, and then measured.

The change rates should be confined within the ranges as follows.

item	OK SPEC	NG/OK
ΔRin	Under Initial ±20%	OK (SPEC SATISFYING)
ΔRout		
ΔVH		
ΔVo/VH	Max. ± 5%	

9. Mark method

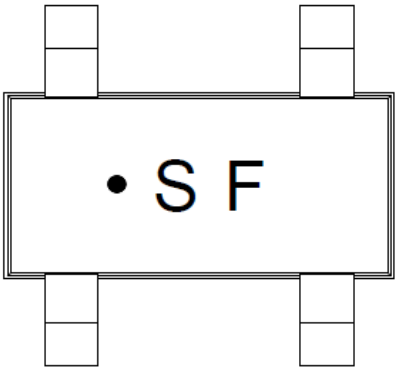

10. External Dimensions of Carrier Tape (Unit:mm)

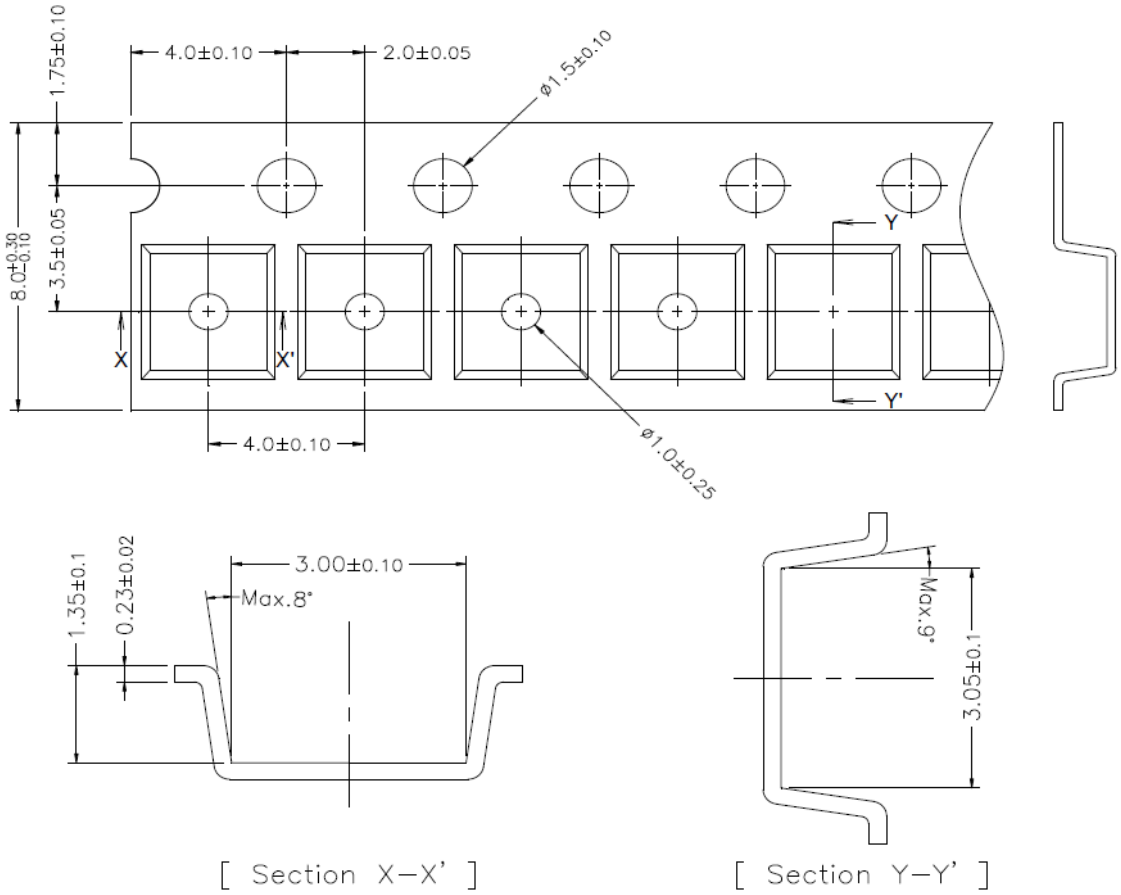

11. External Dimensions of Reel (Unit: mm)

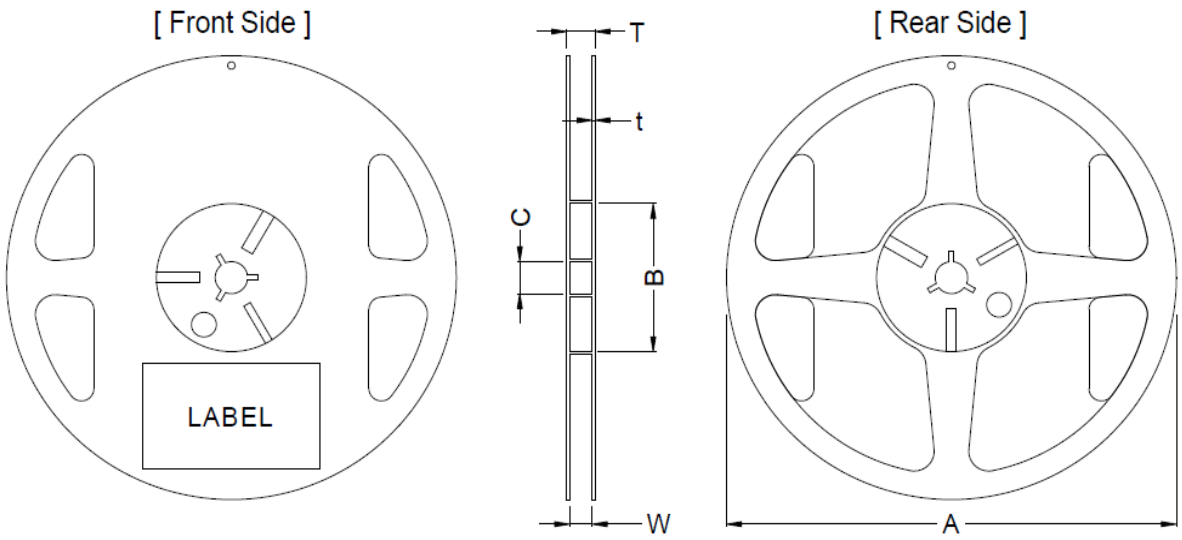

Symbol	A	B	C	W	T	t
Spec	Ø180 +0/-3	Ø60 +1/-0	Ø13±0.3	9±0.3	11.4±1.0	2.0 max

CYTY300B (InSb) HALL-EFFECT ELEMENT

Hall-effect element CYTY300B is made of compound semiconductor material indium stibnite (InSb), which utilizes the Hall-effect principle. It can convert a magnetic flux density signal linearly into voltage output.

FEATURES

- High Magnetic Sensitivity
- Low Offset Voltage
- Miniature Package

TYPICAL APPLICATION

- Magnetic Field Measurement
- Current Sensor
- Detection of Speed
- DC Brushless Motor
- Position Control

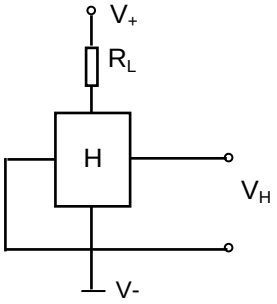

1. Maximum Ratings (Ta=25°C)

Parameter	Symbol	Rating	Unit
Maximum Input Current	Imax	20 (at 25°C)	mA
Maximum Power Dissipation	Pmax	150 (at 25°C)	mW
Operating Temperature Range	Top	- 40 ~ + 110	°C
Storage Temperature Range	Tst	- 40 ~ + 125	°C

2. Electrical Characteristics (Measured at 25°C)

Parameter	Symbol	Measurement Conditions	Min	Max	Unit
Output Hall Voltage	VH	Vin = 1V, B = 50mT	196	320	mV
Input Resistance	Rin	I = 0.1mA	240	550	Ω
Output Resistance	Rout	I = 0.1mA	240	550	Ω
Offset Voltage	VO	Vin = 1V, B = 0G	- 7	+ 7	mV
Temp. Coeff. of VH	α	Ta = 0 ~ + 40°C AVG.	-	- 1.8	% /°C
Temp. Coeff. of Rin, Rout	β	Ta = 0 ~ + 40°C AVG.	-	- 1.8	% /°C
Dielectric strength		100V DC	1.0		MΩ

$V_H = V_{HM} - V_O$ (V_{HM} : The output voltage measured at 500G.)

Markt Schwabener Str. 8
85464 Finsing
Germany

Tel.: +49 (0)8121-2574100
Fax: +49 (0)8121-2574101
Email: info@chenyang-gmbh.com
http://www.chenyang-gmbh.com

3. CHARACTERISTIC CURVES (only for references)

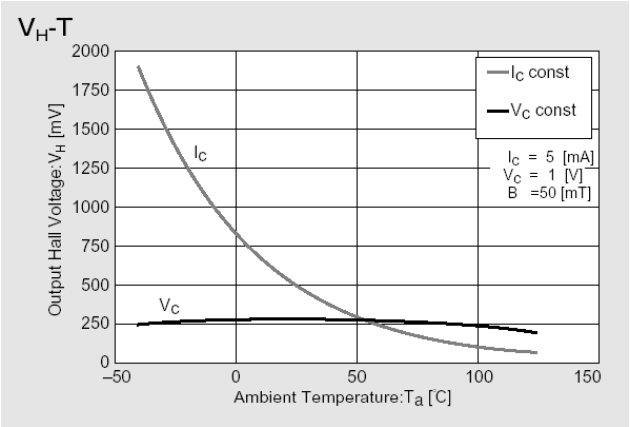

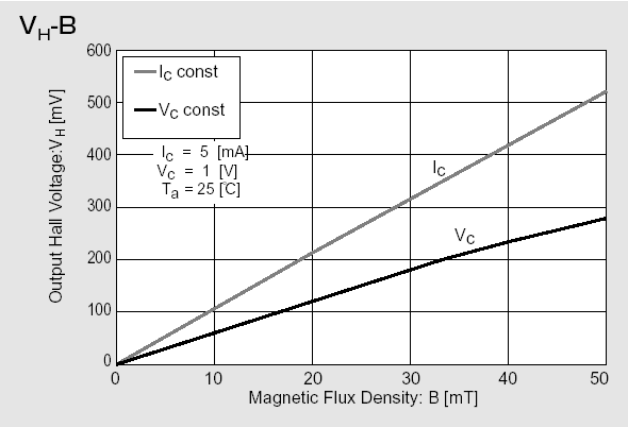

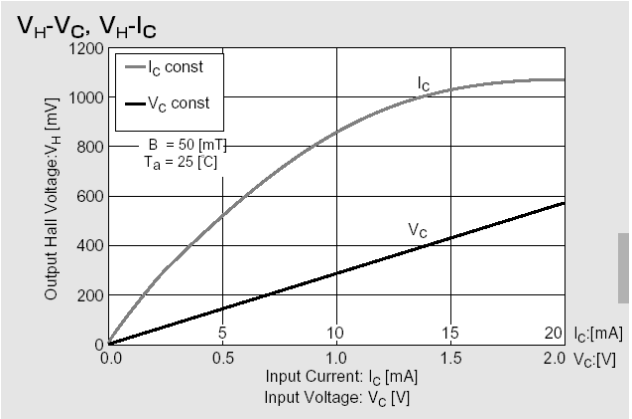

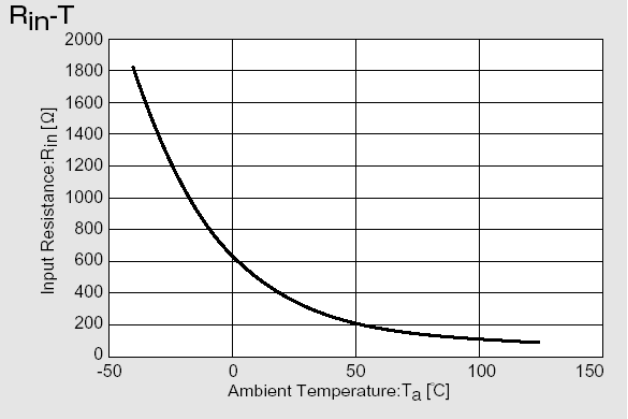

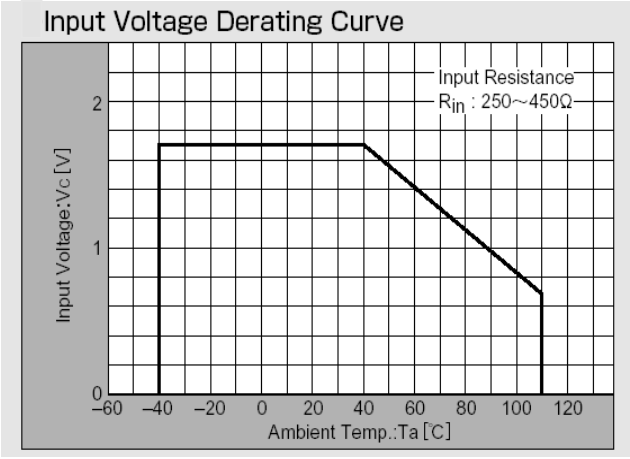

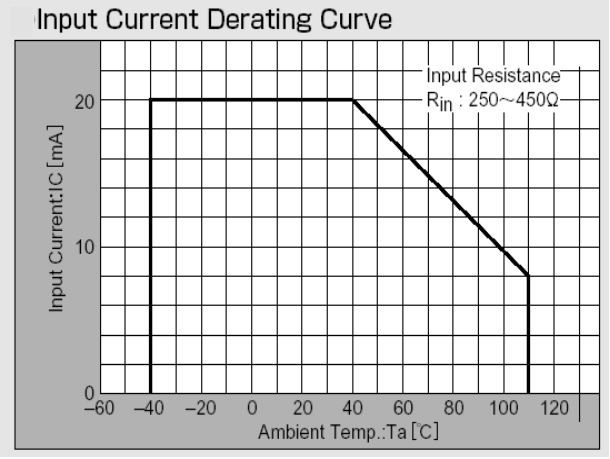

4. External Dimensions (Unit: mm)

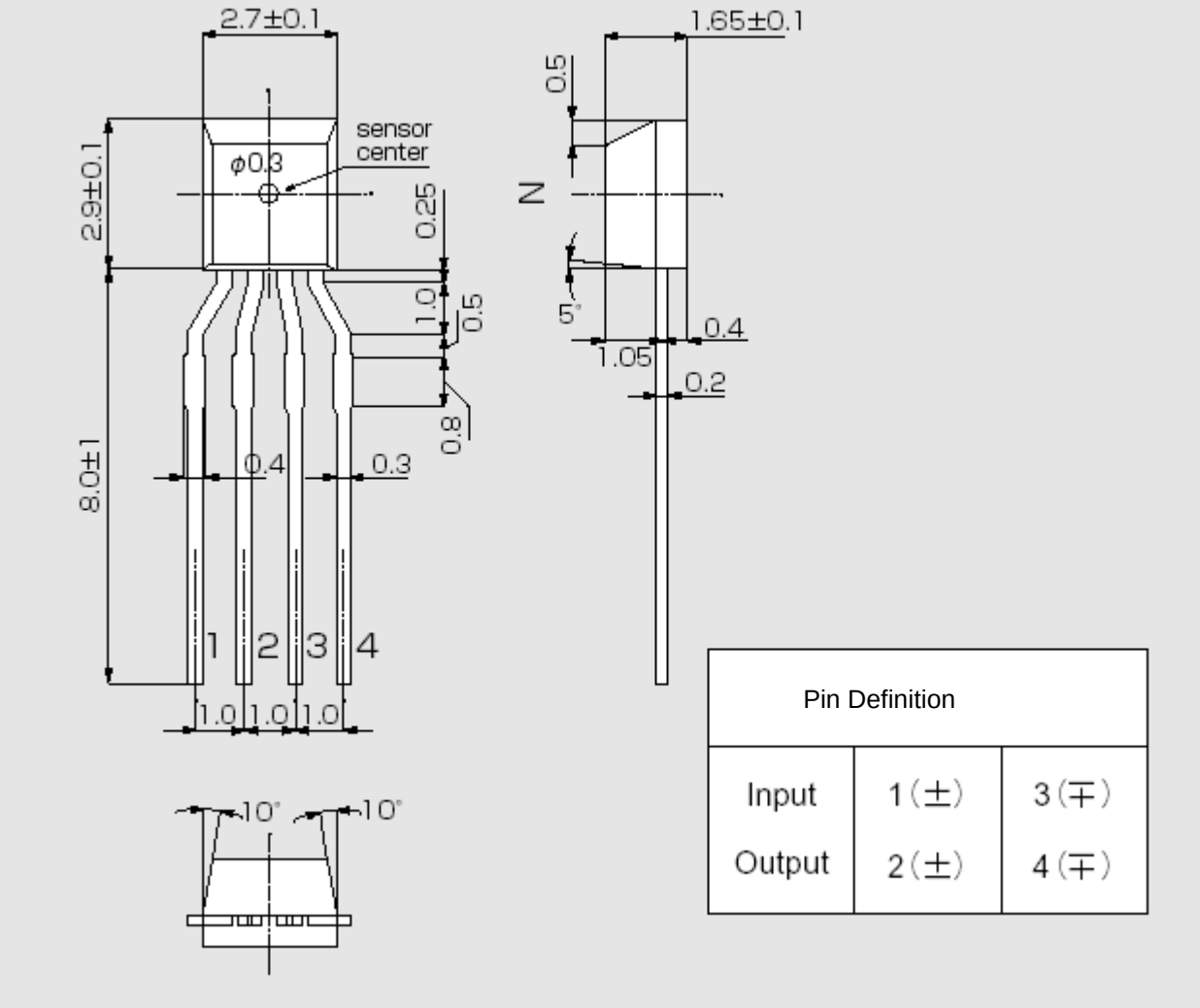

Pin Definition		
Input	1 (±)	3 (∓)
Output	2 (±)	4 (∓)

5. Connection

Circuit 1

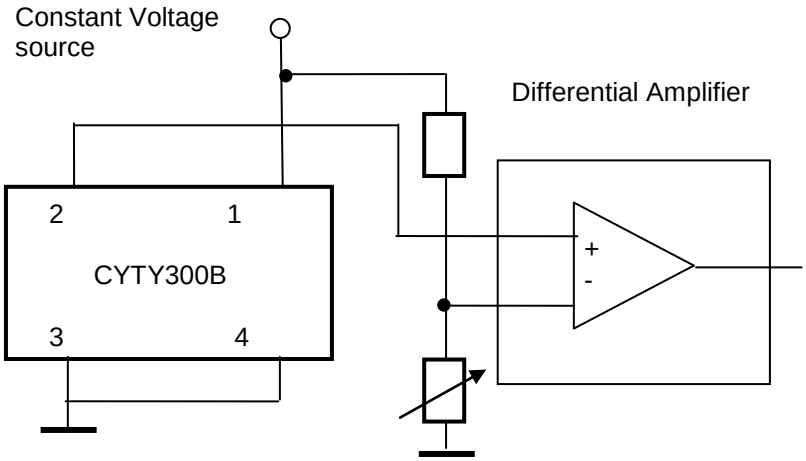

Circuit 2

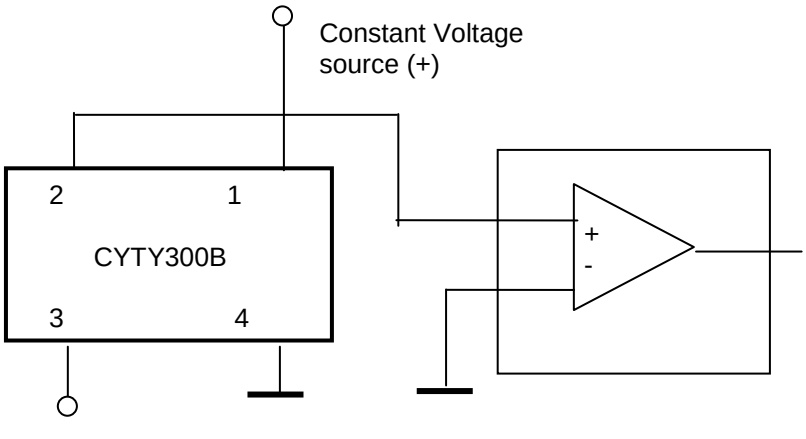

6. Application Notes

The Hall voltage V_H can be positive and negative. But if one connects the sensor as follows (circuit 1):

Pin 1:	positive input voltage V+, for instance +5VDC.
Pin 3:	GND
Pin 2:	OUTPUT
Pin 4:	GND

One can only measure the positive voltage at the pin 2. This means that the output voltage at zero magnetic field is not zero. This voltage is called as offset voltage. The output voltage in this case is not equal to the Hall voltage. The output voltage is equal to the sum of offset voltage and Hall voltage.

The offset voltage will be zero if you connect double power supplies V+ and V- to the sensor (circuit 2):

Pin 1:	positive input voltage V+, for instance +5VDC.
Pin 3:	negative input voltage V-, for instance -5VDC
Pin 2:	OUTPUT
Pin 4:	GND

In this case the output voltage is equal to the Hall Voltage.

CYTY101A InSb Hall Effect Element

Hall-effect element CYTY101A is made of compound semiconductor material indium stibnite (InSb), which utilizes the Hall-effect principle. It can convert a magnetic flux density signal linearly into voltage output.

FEATURES

- High Magnetic Sensitivity
- Low Offset Voltage
- Miniature Package

TYPICAL APPLICATION

- Magnetic Field Measurement
- Current Sensor
- Detection of Speed
- DC Brushless Motor
- Position Control

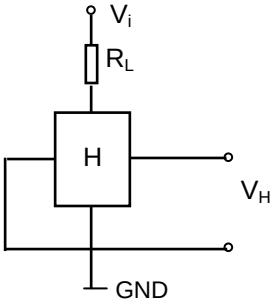

1. Maximum Ratings (Ta=25°C)

Parameter	Symbol	Rating	Unit
Maximum Input Current	Imax	20 (at 25°C)	mA
Maximum Power Dissipation	Pmax	150 (at 25°C)	mW
Operating Temperature Range	Top	- 40 ~ + 110	°C
Storage Temperature Range	Tst	- 40 ~ + 125	°C

2. Electrical Characteristics (Measured at 25°C)

Parameter	Symbol	Measurement Conditions	Min	Max	Unit
Output Hall Voltage	VH	Vin = 1V, B = 50mT	228	370	mV
Input Resistance	Rin	I = 0.1mA	240	550	Ω
Output Resistance	Rout	I = 0.1mA	240	550	Ω
Offset Voltage	VO	Vin = 1V, B = 0G	- 7	+ 7	mV
Temp. Coeff. of VH	α	Ta = 0 ~ + 40°C AVG. B=50mT, Ic=5mA	-	- 1.8	% /°C
Temp. Coeff. of Rin, Rout	β	Ta = 0 ~ + 40°C AVG. B=0, Ic=0.1mA	-	- 1.8	% /°C
Dielectric strength		100V DC	1.0		MΩ

$V_H = V_{HM} - V_O$ (V_{HM} : The output voltage measured at 500G.)

3. Rank Classification and Mark on Output Hall Voltage

Output Hall Voltage,VH (mV)	Rank	Measurement Conditions
228 ~ 274	E	Vin = 1V, B = 50mT (Constant Voltage)
266 ~ 320	F**	
310 ~ 370	G**	

** As standard sensor we offer our customers the rank F and G

Markt Schwabener Str. 8
85464 Finsing
Germany

Tel.: +49 (0)8121-2574100
Fax: +49 (0)8121-2574101
Email: info@chenyang-gmbh.com
http://www.chenyang-gmbh.com

4. CHARACTERISTIC CURVES (only for references)

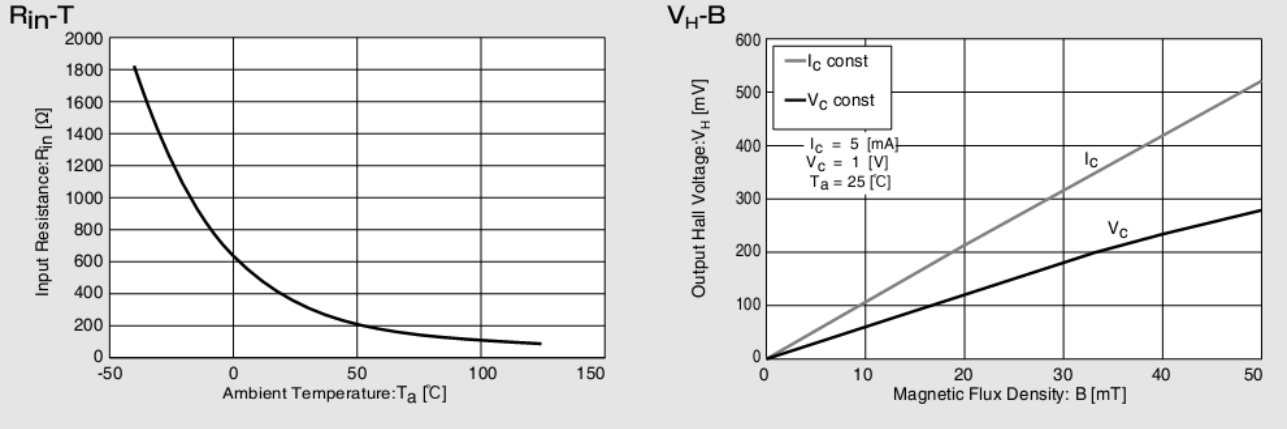

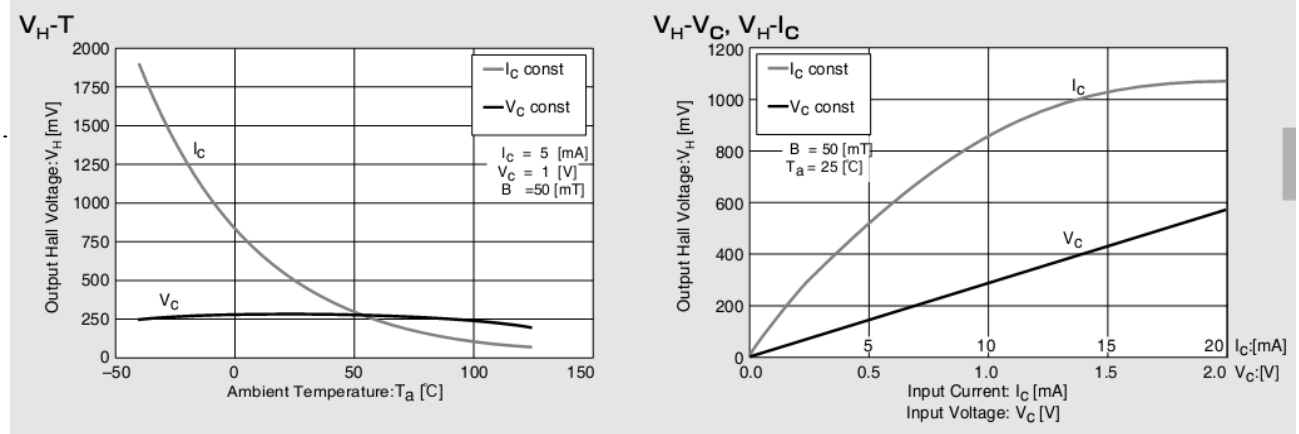

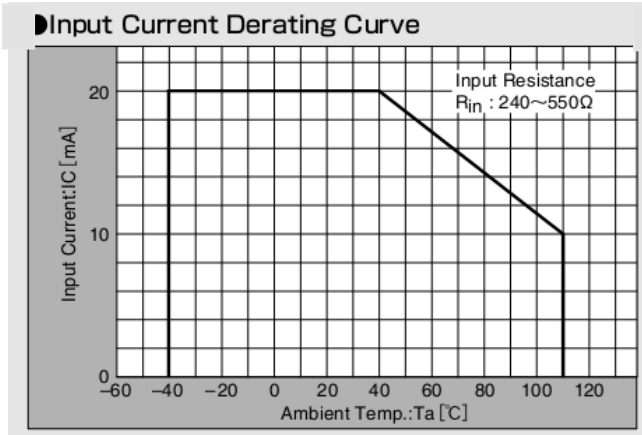

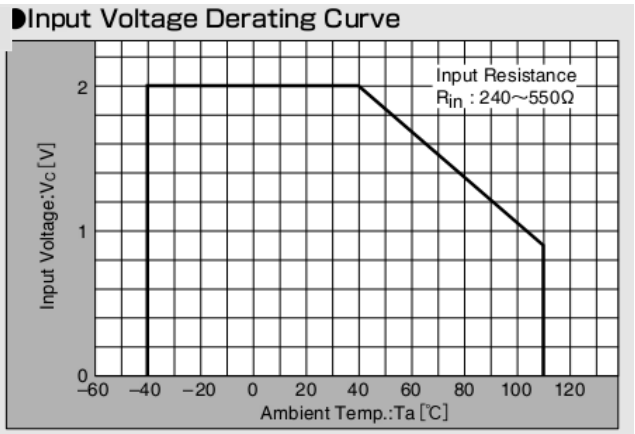

5. Method for Mounting

5-1. Soldering Conditions on PCB

1. No Rapid Heating and Cooling.
2. Recommended Preheating condition is at 130~150°C for 2~3minutes.
3. Recommended Reflowing condition is at 220~230°C for 10~15seconds.

5-2. Soldering Method and Temperature

Items	Methods	Temperature
Reflow	Soldering by Passing the Heated Zone	Max 250°C in 20sec
Solder Iron	Soldering by Soldering Iron	Max 300°C in 3sec

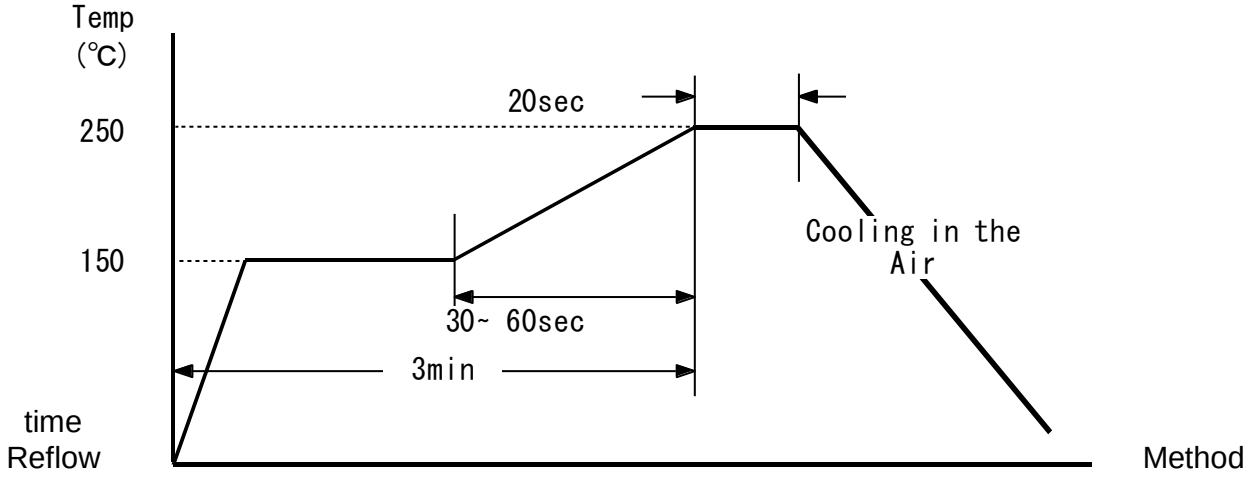

6. Packaging

6-1. Taping

1. CYTY101A should be packed that marked side is viewed from cover tape andlong side is put parallel with tape running direction. Making use of itafter 180° rotation has no problem because of its symmetric mode.
2. The vacant parts more than 40mm are located at front and end side of the reel.

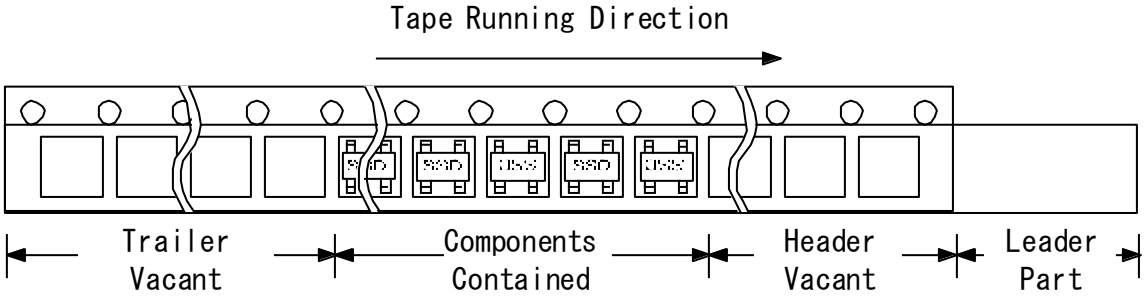

6-2. Tape Specifications

1. Pull Strength(F) = 20~70g

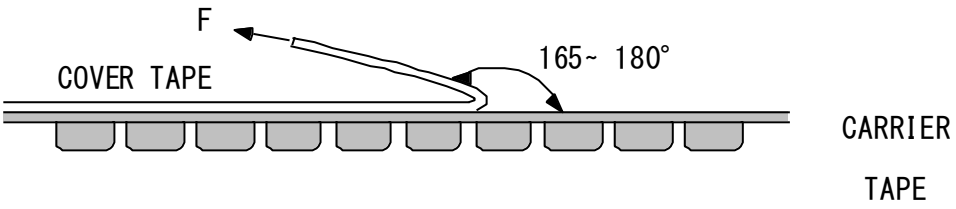

2. Devices should not be flipped out of a pocket when tape is bent down by 15mm curvature.
3. Devices should not be stuck to cover tape.
4. Devices should be kept below 40°C and below RH80% in the shade.
5. Tape has no joint.

6-3. Packing Unit

5. 3,000pcs ~4000pcs of devices are packed in one reel.
6. Five reels are packed in one inner box.
7. Four inner boxes, 60,000pcs of devices, are packed in one outer box.
8. Dummy could be packed for safe dealing.

7. External Dimensions (Unit: mm)

Four leads of input and output terminals are designed in the diagonally symmetric mode and are equal in dimensions. Regardless of 180°rotation of Hall sensor, CYTY101A can be used.

.

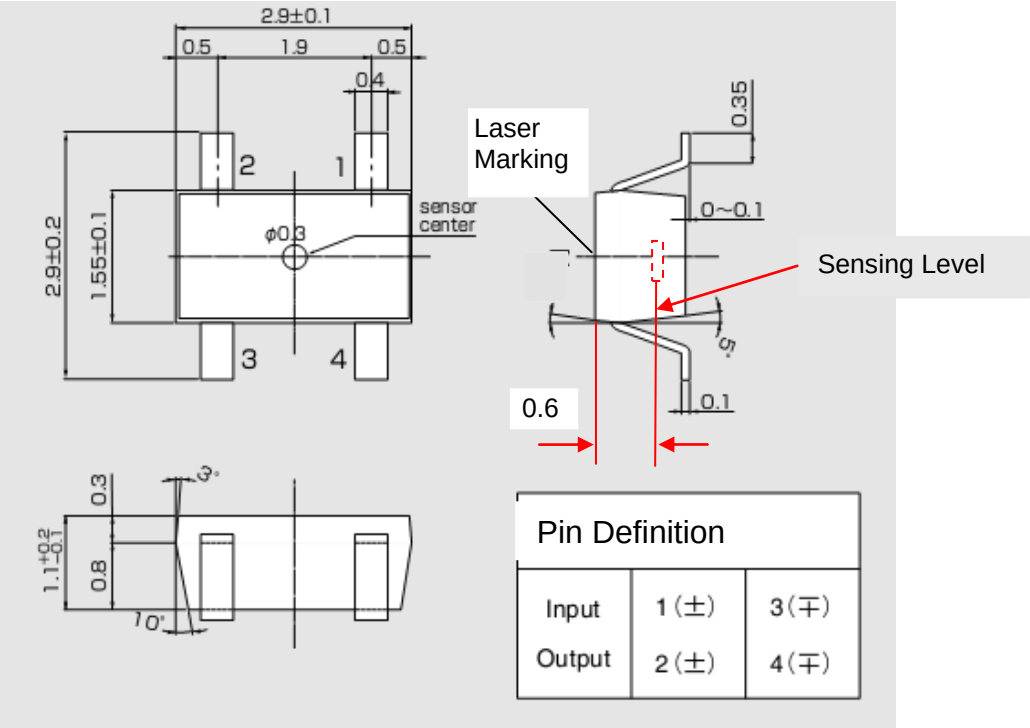

8. Sensor Connection

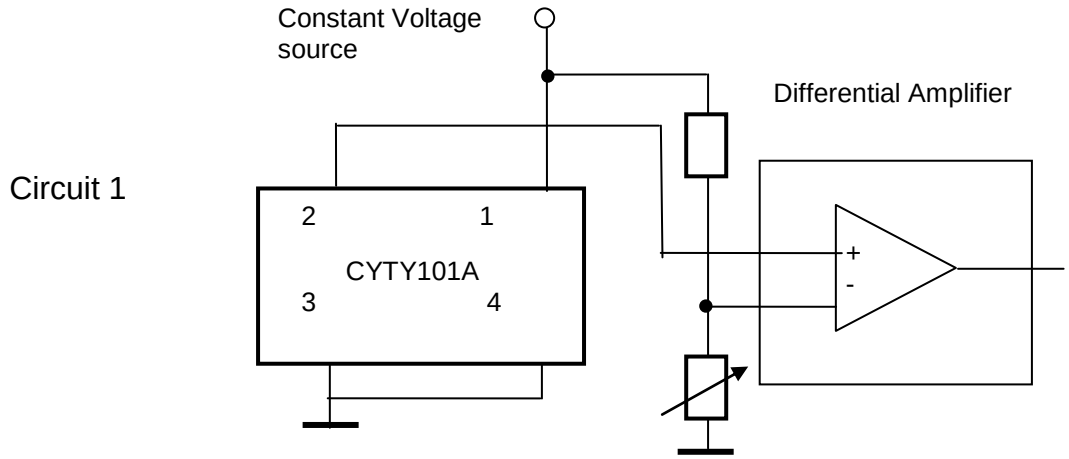

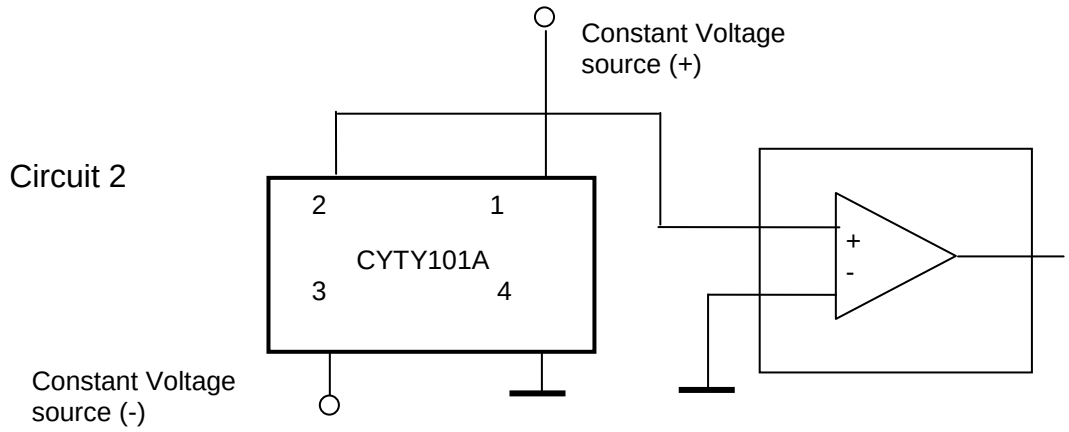

Application Notes

The Hall voltage V_H can be positive and negative. But if one connects the sensor as follows (circuit1):

Pin 1:	positive input voltage V+, for instance +5VDC.
Pin 3:	GND
Pin 2:	OUTPUT
Pin 4:	GND

One can only measure the positive voltage at the pin 2. This means that the output voltage at zero magnetic field is not zero. This voltage is called as offset voltage. The output voltage in this case is not equal to the Hall voltage. The output voltage is equal to the sum of offset voltage and Hall voltage.

The offset voltage will be zero if you connect double power supplies V+ and V- to the sensor (circuit 2):

Pin 1:	positive input voltage V+, for instance +5VDC.
Pin 3:	negative input voltage V-, for instance -5VDC
Pin 2:	OUTPUT
Pin 4:	GND

In this case the output voltage is equal to the Hall Voltage.

9. External Dimensions of Carrier Tape (Unit: mm)

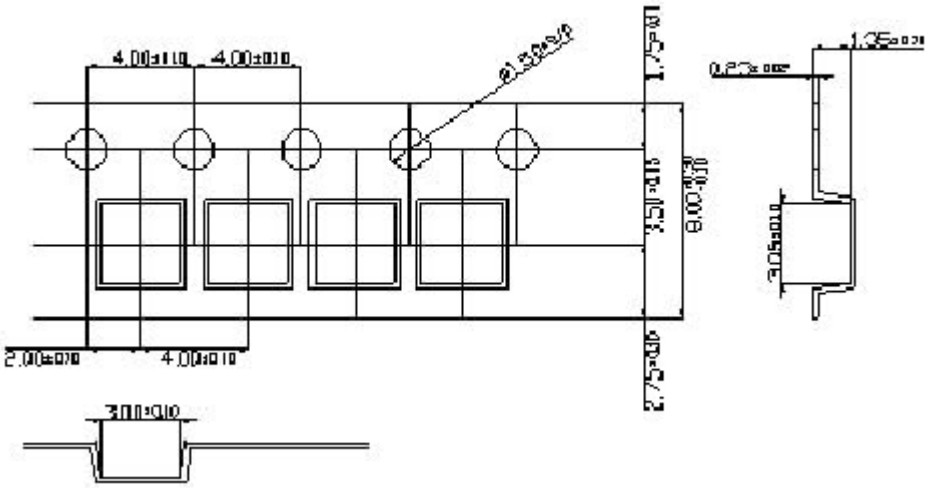

.

10. External Dimensions of Reel (Unit: mm)

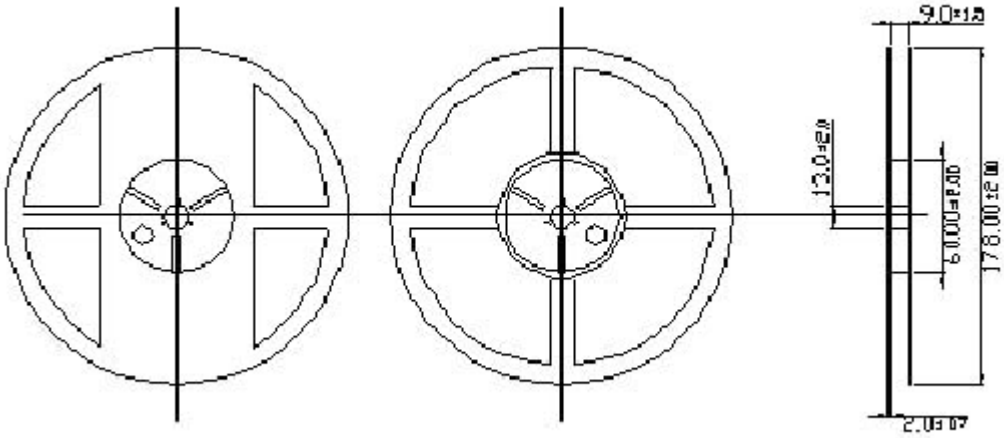

The above reel is made of plastic and is recyclable.

11. RELIABILITY

11.1 TEST CONDITION

	CONDITION
HIGH TEMP. STORAGE	Ta=110°C,t=1000HR
LOW TEMP. STORAGE	Ta=-40°C,t=1000HR
HIGH TEMP. OPERATION	Ta=100°C,Iopr=6mA,t=1000HR
LOW TEMP. OPERATION	Ta=-20°C,Iopr=6mA,t=1000HR
HIGH TEMP. HIGH UMIDITY OPERATION	Ta=60°C, HR=90%,Iopr=9mA,t=1000HR
HUMIDITY	Ta=60°C,HR=90%, t=1000HR
PCT	Ta=121°C,HR=100%, Pv=2atm, t=24HR
THERMAL SHOCK	T(L)=-55°C,T(H)=150°C, t=(L,H)=30min,M=30CYCLE
SOLDERING HEAT RESISTANCE	solder temp=250±5°C, t=10sec,REFLOW
SOLDABILITY	solder temp=230±5°C, t=5sec,dip
TERMINAL STRENGTH	TENSION 300g/30sec
SURGE	V=500V, C=200pF, R=0Ω (test method EIAJ EDX 8503)

11.2 CRITERION FOR JUDGING

After each reliability test, samples should be kept for at least 24 hrs at room temp. & humidity, and then measured.
The change rates should be confined within the ranges as follows.

item	OK SPEC	NG/OK
ΔRin	UNDER ±20%	OK (SPEC SATISFYING)
ΔRout	UNDER ±20%	
ΔVH	UNDER ±20%	
ΔVo/VH	UNDER ± 5%	

CYTY108A (InSb) HALL-EFFECT ELEMENT

Hall-effect element CYTY108A is made of compound semiconductor material indium stibnite (InSb), which utilizes the Hall-effect principle. It can convert a magnetic flux density signal linearly into voltage output.

FEATURES

- High Magnetic Sensitivity
- Low Offset Voltage
- Miniature Package

TYPICAL APPLICATION

- Magnetic Field Measurement
- Current Sensor
- Detection of Speed
- DC Brushless Motor
- Position Control

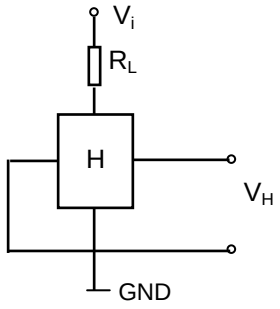

1. Maximum Ratings

(Ta=25°C)

Parameter	Symbol	Rating	Unit
Maximum Input Current	Imax	20 (at 25°C)	mA
Maximum Power Dissipation	Pmax	150 (at 25°C)	mW
Operating Temperature Range	Top	- 40 ~ + 110	°C
Storage Temperature Range	Tst	- 40 ~ + 125	°C

2. Electrical Characteristics (Measured at 25°C)

Parameter	Symbol	Measurement Conditions	Min	Max	Unit
Output Hall Voltage	VH	Vin = 1V, B = 50mT	196	320	mV
Input Resistance	Rin	I = 0.1mA	240	550	Ω
Output Resistance	Rout	I = 0.1mA	240	550	Ω
Offset Voltage	VO	Vin = 1V, B = 0G	- 7	+ 7	mV
Temp. Coeff. of VH	α	Ta = 0 ~ + 40°C AVG. B=50mT, Ic=5mA	-	- 1.8	% /°C
Temp. Coeff. of Rin, Rout	β	Ta = 0 ~ + 40°C AVG. B=0, Ic=0.1mA	-	- 1.8	% /°C
Dielectric strength		100V DC	1.0		MΩ

$V_H = V_{HM} - V_O$ (V_{HM} : The output voltage measured at 500G.)

3. Rank Classification and Mark on Output Hall Voltage

Output Hall Voltage,VH (mV)	Rank	Measurement Conditions
196 ~ 236	D	Vin = 1V, B = 50mT (Constant Voltage)
228 ~ 274	E**	
266 ~ 320	F**	

** Als standard sensor we offer our customers the rank E and F

Markt Schwabener Str. 8
85464 Finsing
Germany

Tel.: +49 (0)8121-2574100
Fax: +49 (0)8121-2574101
Email: info@chenyang-gmbh.com
http://www.chenyang-gmbh.com

4. CHARACTERISTIC CURVES (only for references)

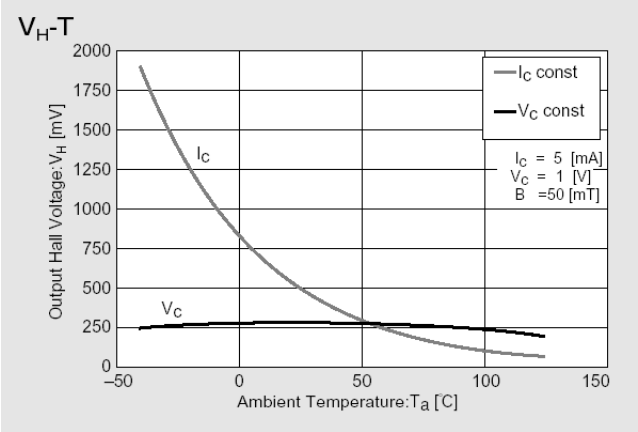

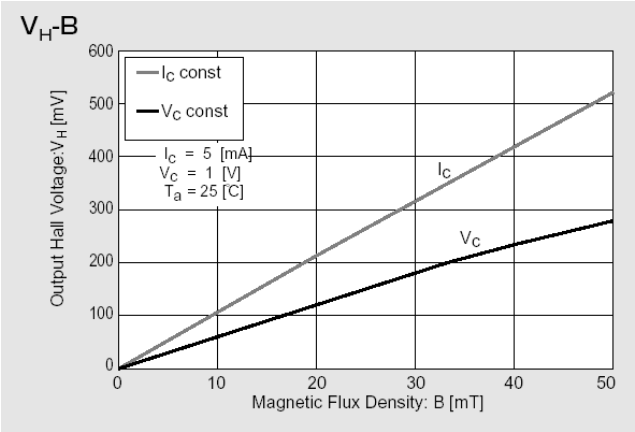

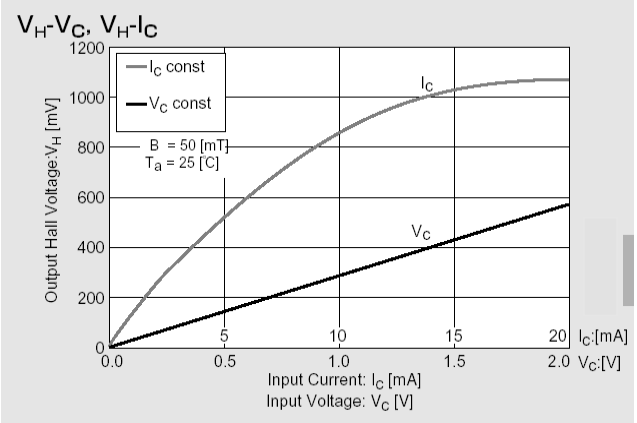

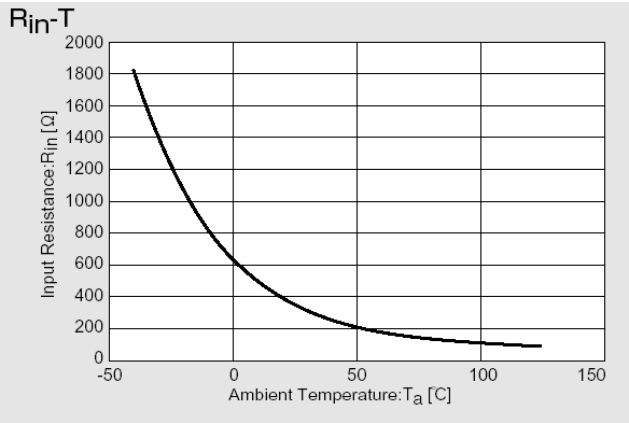

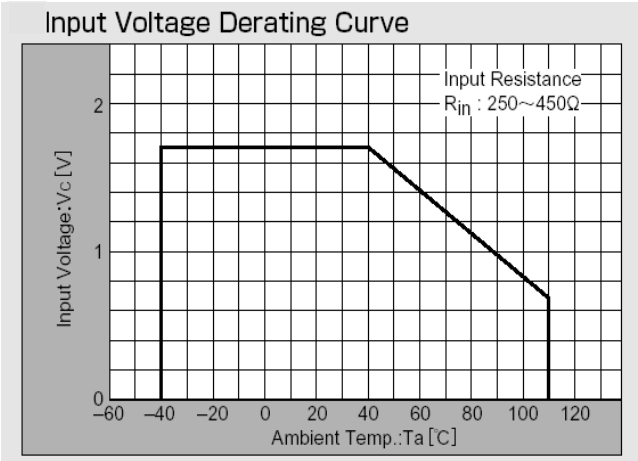

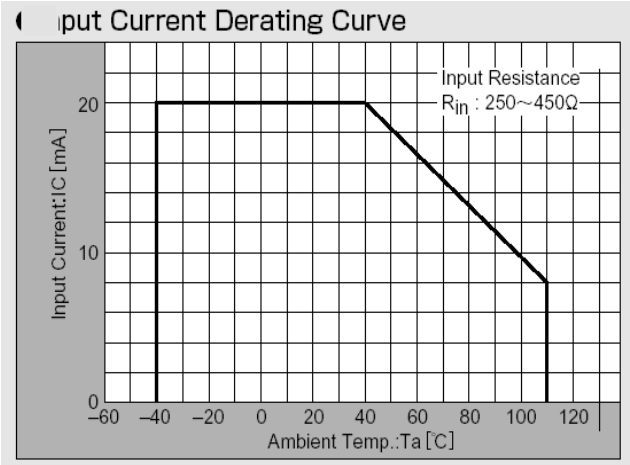

5. Method for Mounting

5-1. Soldering Conditions on PCB

1. No Rapid Heating and Cooling.
2. Recommended Preheating condition is at 130~150°C for 2~3minutes.
3. Recommended Reflowing condition is at 220~230°C for 10~15seconds.

5-2. Soldering Method and Temperature

Items	Methods	Temperature
Reflow	Soldering by Passing the Heated Zone	Max 250°C in 20sec
Solder Iron	Soldering by Soldering Iron	Max 300°C in 3sec

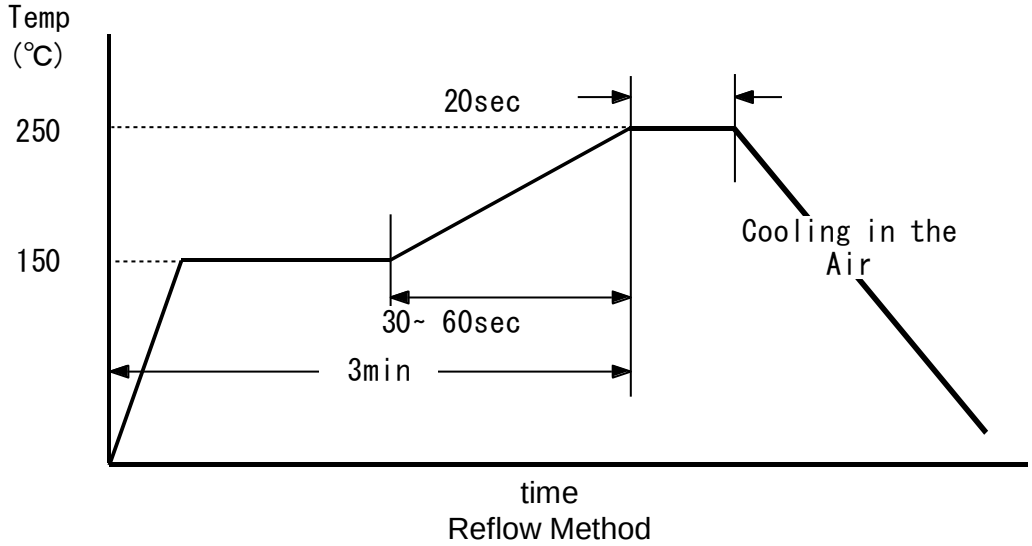

Reflow Method

6. Packaging

6-1. Taping

1. CYTY108A should be packed that marked side is viewed from cover tape andlong side is put parallel with tape running direction. Making use of itafter 180° rotation has no problem becaus e of its symmetric mode.
2. The vacant parts more than 40mm are located at front and end side of the reel.

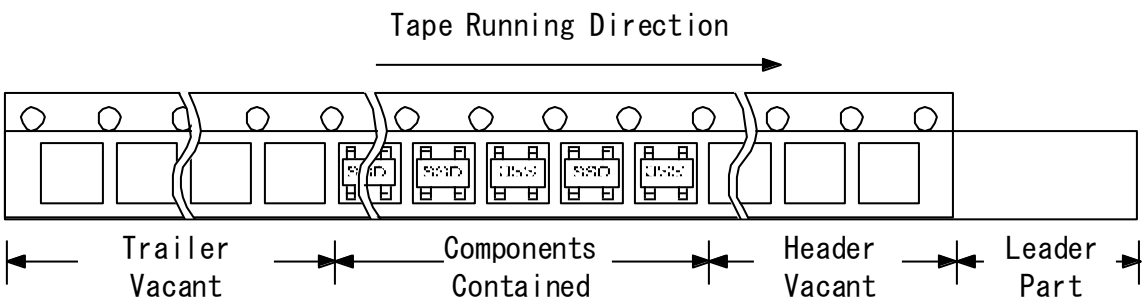

6-2. Tape Specifications

1. Pull Strength(F) = 20~70g

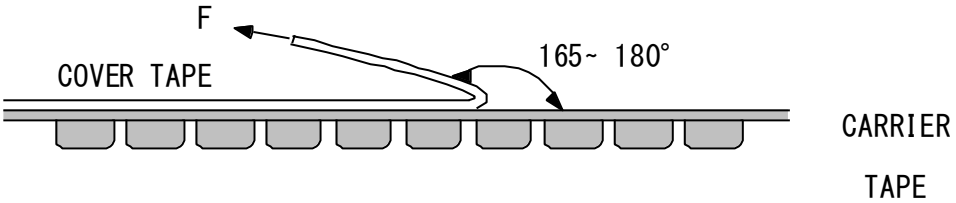

2. Devices should not be flipped out of a pocket when tape is bent down by 15mm curvature.
3. Devices should not be stuck to cover tape.
4. Devices should be kept below 40°C and below RH80% in the shade.
5. Tape has no joint.

6-3. Packing Unit

1. 3,000pcs of devices are packed in one reel.
2. Five reels are packed in one inner box.
3. Four inner boxes, 60,000pcs of devices, are packed in one outer box.
4. Dummy could be packed for safe dealing.

7. External Dimensions (Unit: mm)

Four leads of input and output terminals are designed in the diagonally symmetric mode and are equal in dimensions. Regardless of 180°rotation of Hall sensor, CYTY108A can be used

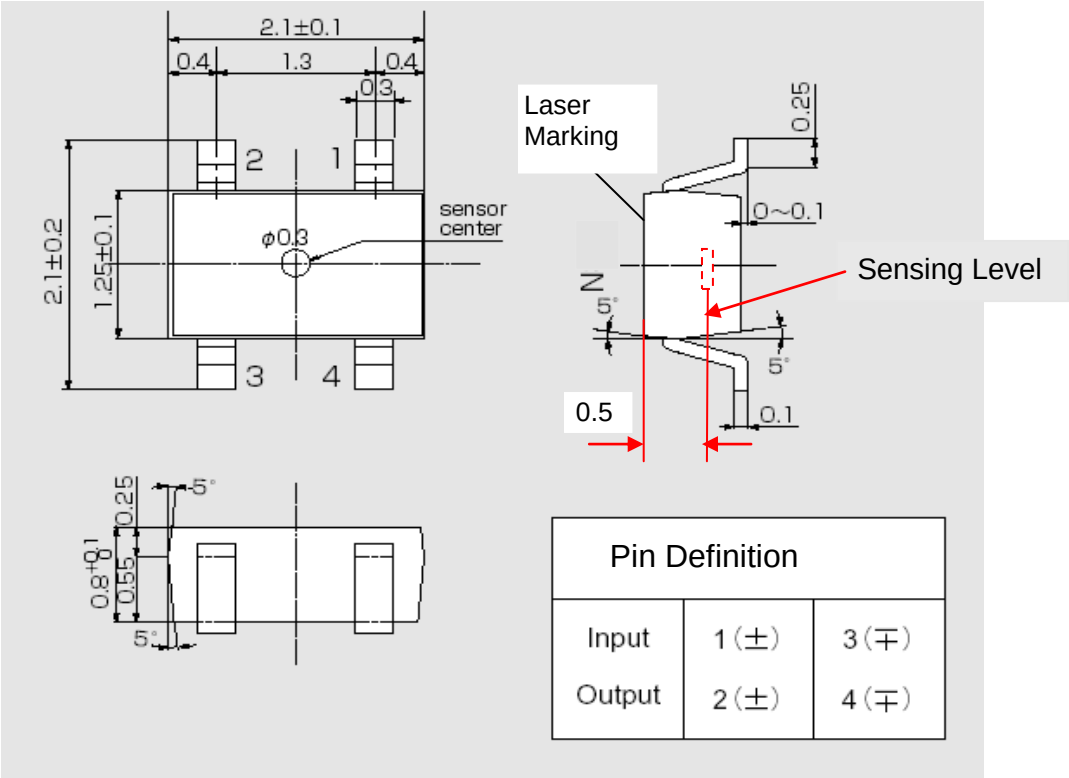

Connection

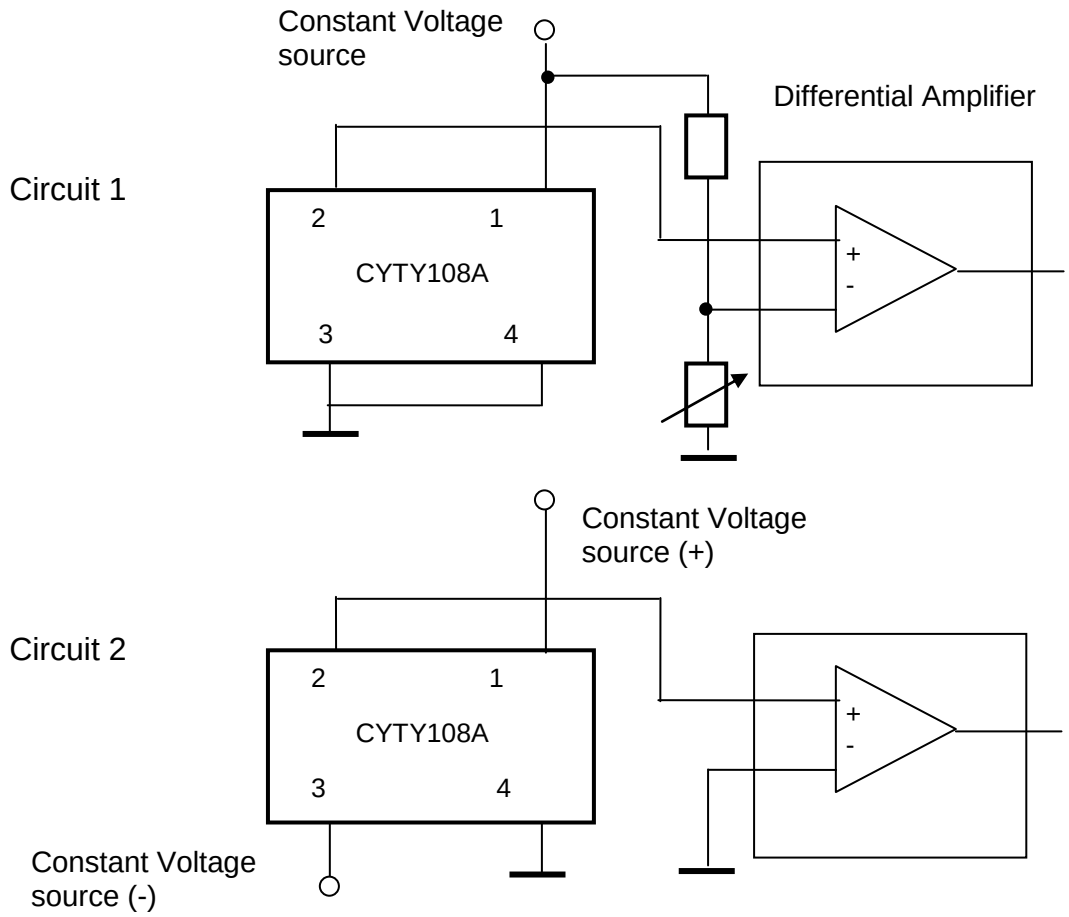

Application Notes

The Hall voltage V_H can be positive and negative. But if one connects the sensor as follows (circuit 1):

Pin 1:	positive input voltage V+, for instance +5VDC.
Pin 3:	GND
Pin 2:	OUTPUT
Pin 4:	GND

One can only measure the positive voltage at the pin 2. This means that the output voltage at zero magnetic field is not zero. This voltage is called as offset voltage. The output voltage in this case is not equal to the Hall voltage. The output voltage is equal to the sum of offset voltage and Hall voltage.

The offset voltage will be zero if you connect double power supplies V+ and V- to the sensor (circuit 2):

Pin 1:	positive input voltage V+, for instance +5VDC.
Pin 3:	negative input voltage V-, for instance -5VDC
Pin 2:	OUTPUT
Pin 4:	GND

In this case the output voltage is equal to the Hall Voltage.

8. External Dimensions of Carrier Tape (Unit: mm)

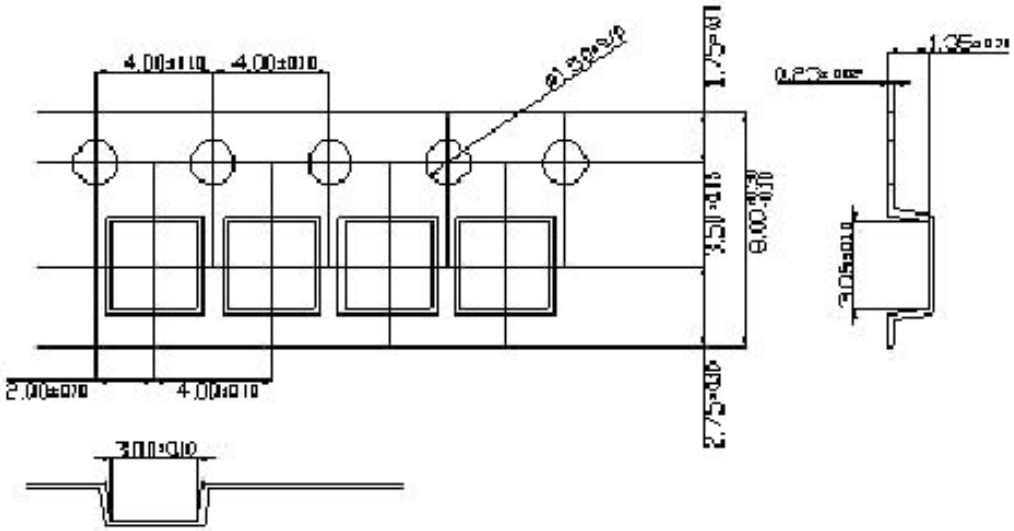

9. External Dimensions of Reel (Unit: mm)

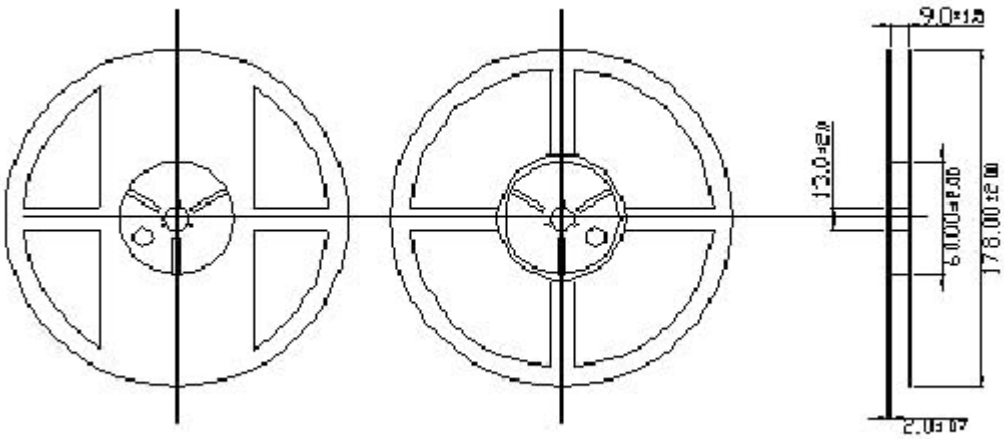

The above reel is made of plastic and is recyclable.

10. RELIABILITY

10.1 TEST CONDITION

	CONDITION
HIGH TEMP. STORAGE	Ta=110°C,t=1000HR
LOW TEMP. STORAGE	Ta=-40°C,t=1000HR
HIGH TEMP. OPERATION	Ta=100°C,Iopr=6mA,t=1000HR
LOW TEMP. OPERATION	Ta=-20°C,Iopr=6mA,t=1000HR
HIGH TEMP. HIGH UMIDITY OPERATION	Ta=60°C, HR=90%,Iopr=9mA,t=1000HR
HUMIDITY	Ta=60°C,HR=90%, t=1000HR
PCT	Ta=121°C,HR=100%, Pv=2atm, t=24HR
THERMAL SHOCK	T(L)=-55°C,T(H)=150°C, t=(L,H)=30min,M=30CYCLE
SOLDERING HEAT RESISTANCE	solder temp=250±5°C, t=10sec,REFLOW
SOLDABILITY	solder temp=230±5°C, t=5sec,dip
TERMINAL STRENGTH	TENSION 300g/30sec
SURGE	V=500V, C=200pF, R=0Ω (test method EIAJ EDX 8503)

10.2 CRITERION FOR JUDGING

After each reliability test, samples should be kept for at least 24 hrs at room temp. & humidity, and then measured.
The change rates should be confined within the ranges as follows.

item	OK SPEC	NG/OK
ΔRin	UNDER ±20%	OK (SPEC SATISFYING)
ΔRout	UNDER ±20%	
ΔVH	UNDER ±20%	
ΔVo/VH	UNDER ± 5%	

CYTY105A InSb Hall Effect Element

Hall-effect element CYTY105A is made of compound semiconductor material indium stibnite (InSb), which utilizes the Hall-effect principle. It can convert a magnetic flux density signal linearly into voltage output.

FEATURES

- High Magnetic Sensitivity
- Low Offset Voltage
- Miniature Package

TYPICAL APPLICATION

- Magnetic Field Measurement
- Current Sensor
- Detection of Speed
- DC Brushless Motor
- Position Control

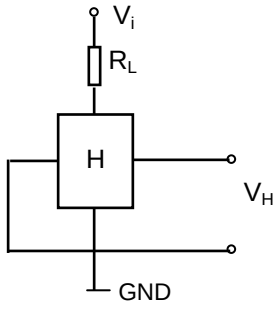

1. Maximum Ratings (Ta=25°C)

Parameter	Symbol	Rating	Unit
Maximum Input Current	Imax	20 (at 25°C)	mA
Maximum Power Dissipation	Pmax	150 (at 25°C)	mW
Operating Temperature Range	Top	- 40 ~ + 110	°C
Storage Temperature Range	Tst	- 40 ~ + 125	°C

2. Electrical Characteristics (Measured at 25°C)

Parameter	Symbol	Measurement Conditions	Min	Max	Unit
Output Hall Voltage	VH	Vin = 1V, B = 50mT	168	274	mV
Input Resistance	Rin	I = 0.1mA	240	550	Ω
Output Resistance	Rout	I = 0.1mA	240	550	Ω
Offset Voltage	VO	Vin = 1V, B = 0G	- 12	+ 12	mV
Temp. Coeff. of VH	α	Ta = 0 ~ + 40°C AVG. B=50mT, Ic=5mA	-	- 1.8	% /°C
Temp. Coeff. of Rin, Rout	β	Ta = 0 ~ + 40°C AVG. B=0, Ic=0.1mA	-	- 1.8	% /°C
Dielectric strength		100V DC	1.0		MΩ

$V_H = V_{HM} - V_O$ (V_{HM} : The output voltage measured at 500G.)

3. Rank Classification and Mark on Output Hall Voltage

Output Hall Voltage,VH (mV)	Rank	Measurement Conditions
168 ~ 204	C	Vin = 1V, B = 50mT (Constant Voltage)
196 ~ 236	D	
228 ~ 274	E	

Markt Schwabener Str. 8
85464 Finsing
Germany

Tel.: +49 (0)8121-2574100
Fax: +49 (0)8121-2574101
Email: info@chenyang-gmbh.com
http://www.chenyang-gmbh.com

4. CHARACTERISTIC CURVES (only for references)

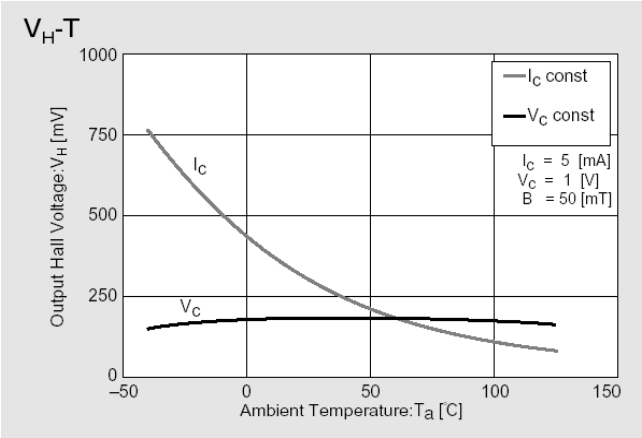

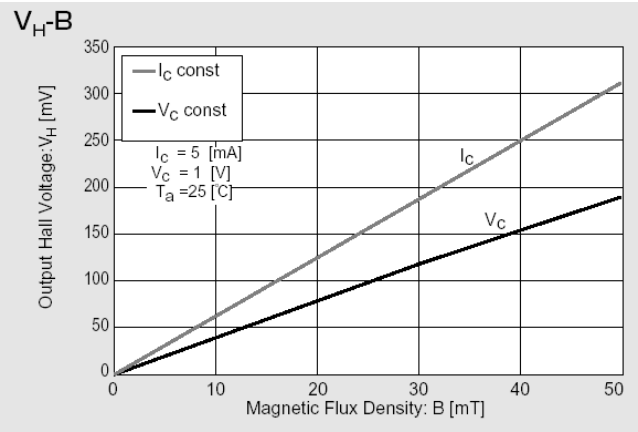

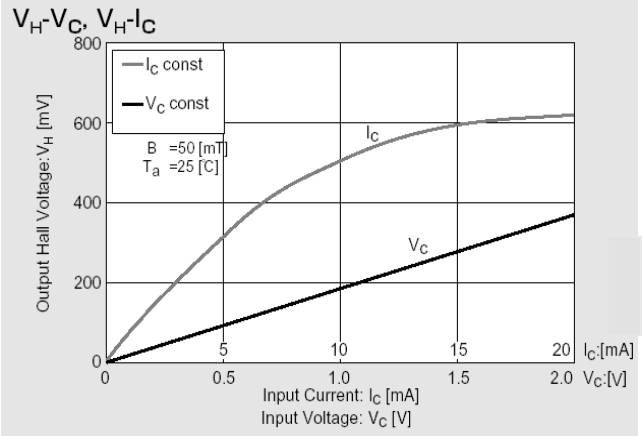

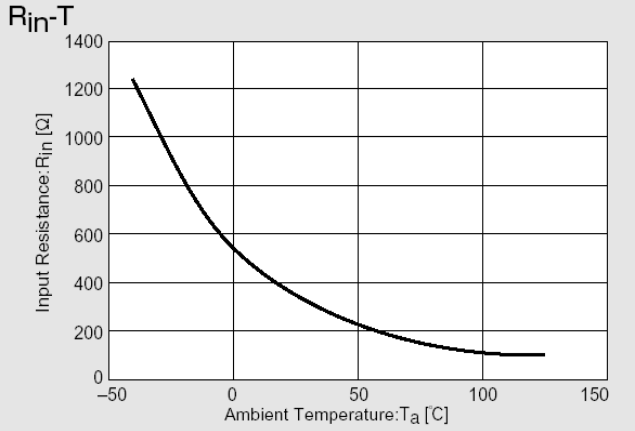

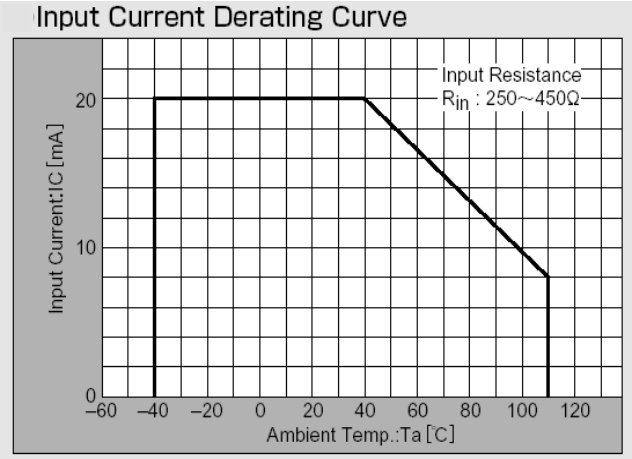

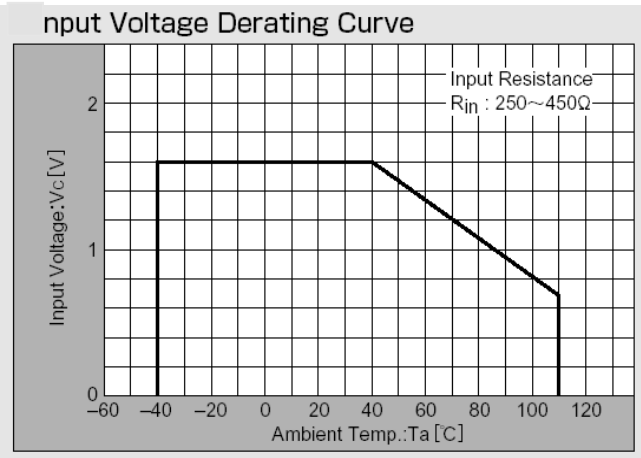

5. Method for Mounting

5-1. Soldering Conditions on PCB

1. No Rapid Heating and Cooling.
2. Recommended Preheating condition is at 130~150°C for 2~3minutes.
3. Recommended Reflowing condition is at 220~230°C for 10~15seconds.

5-2. Soldering Method and Temperature

Items	Methods	Temperature
Reflow	Soldering by Passing the Heated Zone	Max 250°C in 20sec
Solder Iron	Soldering by Soldering Iron	Max 300°C in 3sec

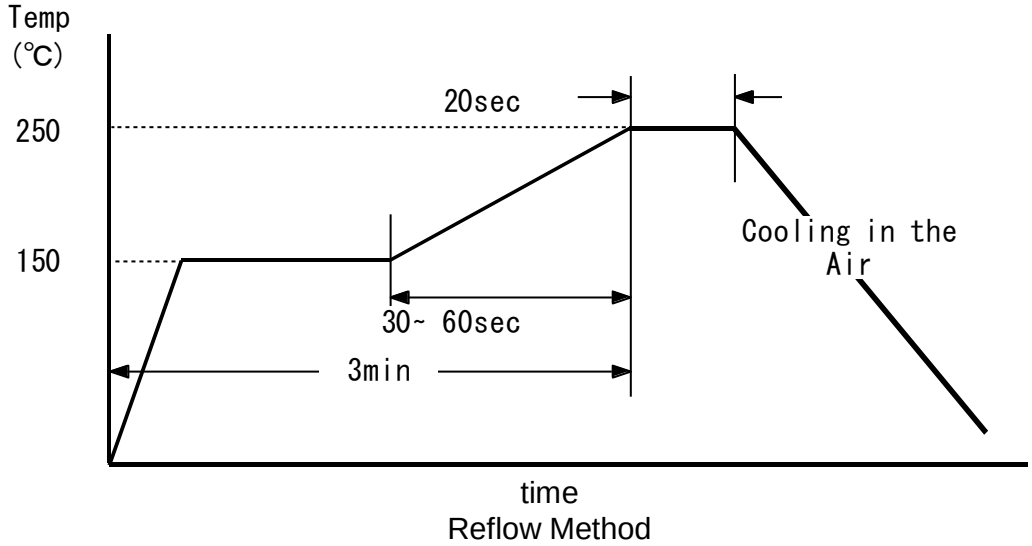

Reflow Method

6. Packaging

6-1. Taping

1. CYTY105A should be packed that marked side is viewed from cover tape andlong side is put parallel with tape running direction. Making use of itafter 180° rotation has no problem becaus e of its symmetric mode.
2. The vacant parts more than 40mm are located at front and end side of the reel.

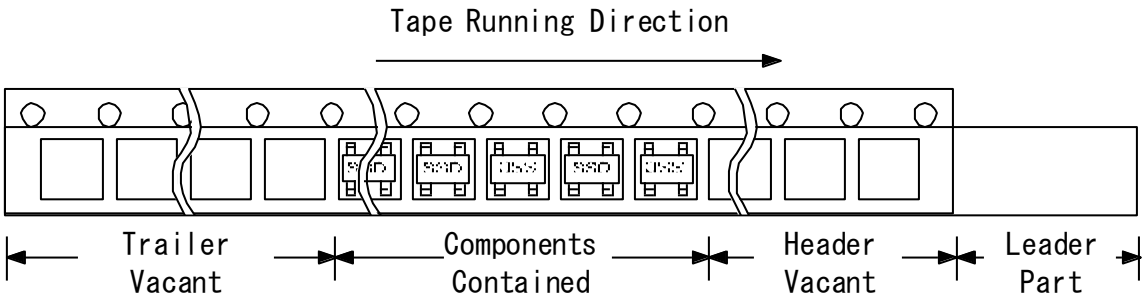

6-2. Tape Specifications

1. Pull Strength(F) = 20~70g

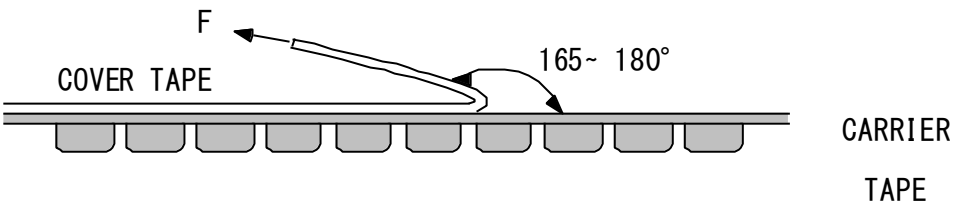

2. Devices should not be flipped out of a pocket when tape is bent down by 15mm curvature.
3. Devices should not be stuck to cover tape.
4. Devices should be kept below 40°C and below RH80% in the shade.
5. Tape has no joint.

6-3. Packing Unit

1. 3,000pcs ~4000pcs of devices are packed in one reel.
2. Five reels are packed in one inner box.
3. Four inner boxes, 60,000pcs of devices, are packed in one outer box.
4. Dummy could be packed for safe dealing.

.

7. External Dimensions (Unit: mm)

Four leads of input and output terminals are designed in the diagonally symmetric mode and are equal in dimensions. Regardless of 180°rotation of Hall sensor, CYTY105A can be used

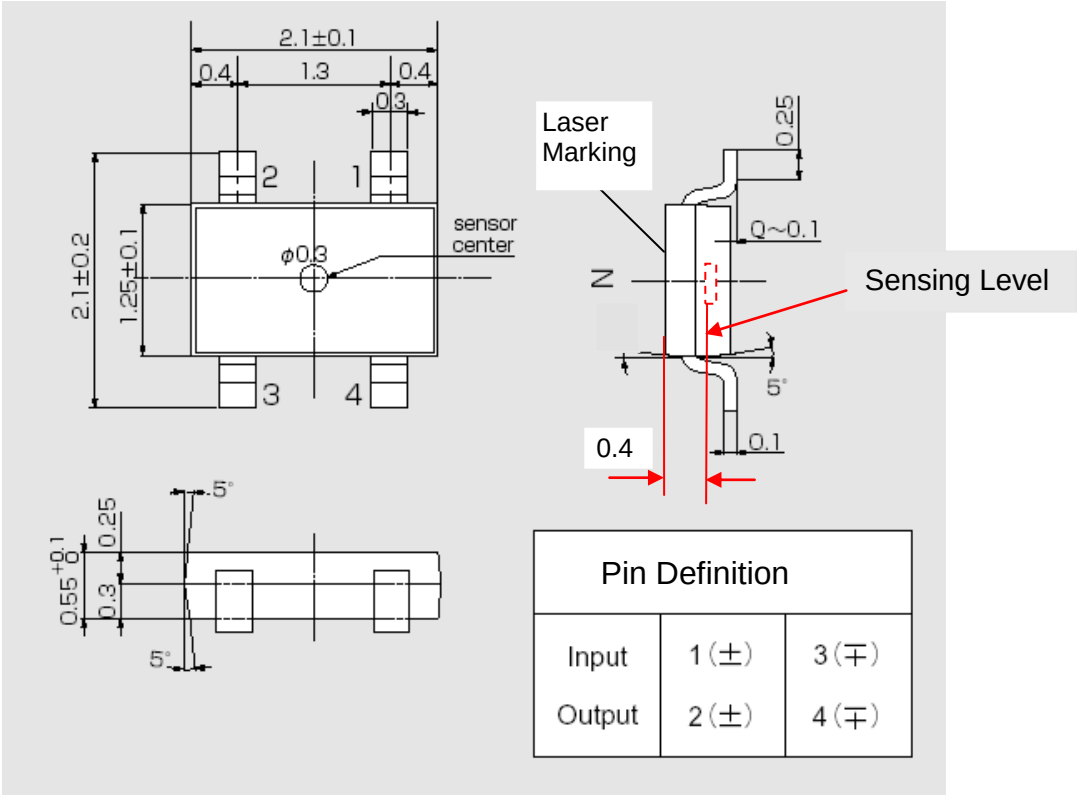

8. External Dimensions of Carrier Tape (Unit: mm)

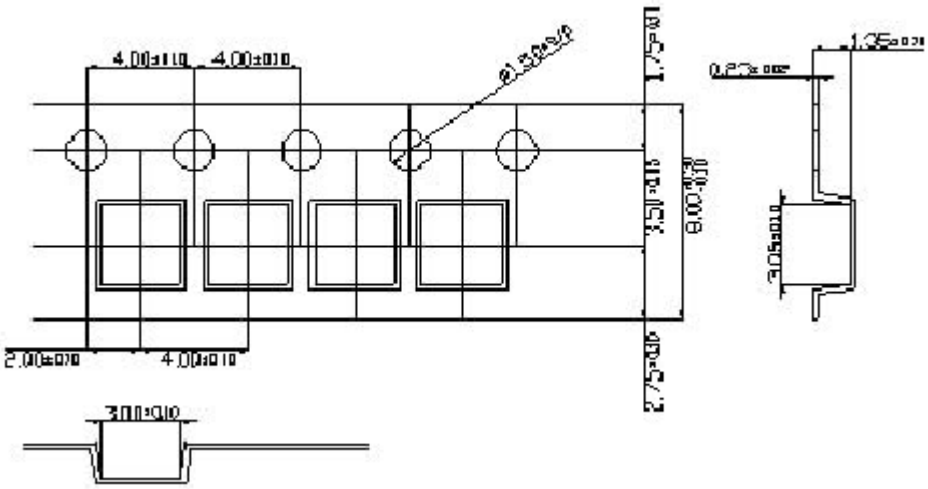

9. External Dimensions of Reel (Unit: mm)

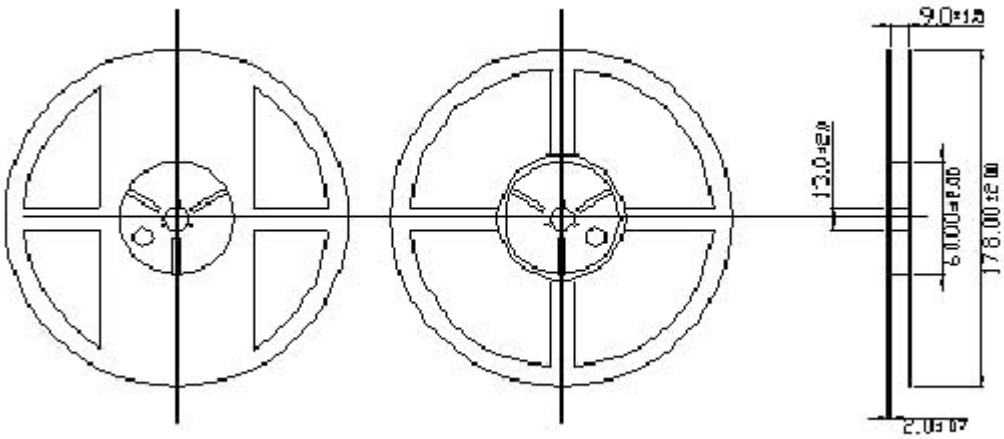

The above reel is made of plastic and is recyclable.

10. RELIABILITY

10.1 TEST CONDITION

	CONDITION
HIGH TEMP. STORAGE	Ta=110°C,t=1000HR
LOW TEMP. STORAGE	Ta=-40°C,t=1000HR
HIGH TEMP. OPERATION	Ta=100°C,Iopr=6mA,t=1000HR
LOW TEMP. OPERATION	Ta=-20°C,Iopr=6mA,t=1000HR
HIGH TEMP. HIGH UMIDITY OPERATION	Ta=60°C, HR=90%,Iopr=9mA,t=1000HR
HUMIDITY	Ta=60°C,HR=90%, t=1000HR
PCT	Ta=121°C,HR=100%, Pv=2atm, t=24HR
THERMAL SHOCK	T(L)=-55°C,T(H)=150°C, t=(L,H)=30min,M=30CYCLE
SOLDERING HEAT RESISTANCE	solder temp=250±5°C, t=10sec,REFLOW
SOLDABILITY	solder temp=230±5°C, t=5sec,dip
TERMINAL STRENGTH	TENSION 300g/30sec
SURGE	V=500V, C=200pF, R=0Ω (test method EIAJ EDX 8503)

10.2 CRITERION FOR JUDGING

After each reliability test, samples should be kept for at least 24 hrs at room temp. & humidity, and then measured.
The change rates should be confined within the ranges as follows.

item	OK SPEC	NG/OK
ΔRin	UNDER ±20%	OK (SPEC SATISFYING)
ΔRout	UNDER ±20%	
ΔVH	UNDER ±20%	
ΔVo/VH	UNDER ± 5%	

CYTY322B InSb Hall Effect Element

Hall-effect element CYTY322B is made of compound semiconductor material indium stibnite (InSb), which utilizes the Hall-effect principle. It can convert a magnetic flux density signal linearly into voltage output.

FEATURES

- High Magnetic Sensitivity
- Low Offset Voltage
- Miniature Package

TYPICAL APPLICATION

- Magnetic Field Measurement
- Current Sensor
- Detection of Speed
- DC Brushless Motor
- Position Control

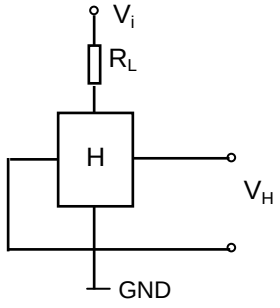

1. Maximum Ratings

(Ta=25°C)

Parameter	Symbol	Rating	Unit
Maximum Input Current	Imax	20 (at 25°C)	mA
Maximum Power Dissipation	Pmax	150 (at 25°C)	mW
Operating Temperature Range	Top	- 40 ~ + 110	°C
Storage Temperature Range	Tst	- 40 ~ + 125	°C

2. Electrical Characteristics (Measured at 25°C)

Parameter	Symbol	Measurement Conditions	Min	Max	Unit
Output Hall Voltage	VH	Vin = 1V, B = 50mT	228	370	mV
Input Resistance	Rin	I = 0.1mA	240	550	Ω
Output Resistance	Rout	I = 0.1mA	240	550	Ω
Offset Voltage	VO	Vin = 1V, B = 0G	- 7	+ 7	mV
Temp. Coeff. of VH	α	Ta = 0 ~ + 40°C AVG. B=50mT, Ic=5mA	-	- 1.8	% /°C
Temp. Coeff. of Rin, Rout	β	Ta = 0 ~ + 40°C AVG. B=0, Ic=0.1mA	-	- 1.8	% /°C
Dielectric strength		100V DC	1.0		MΩ

$V_H = V_{HM} - V_O$ (V_{HM} : The output voltage measured at 50mT)

3. Rank Classification and Mark on Output Hall Voltage

Output Hall Voltage,VH (mV)	Rank	Measurement Conditions
228 ~ 274	E	Vin = 1V, B = 50mT (Constant Voltage Drive)
266 ~ 320	F*	
310 ~ 370	G*	

*Sensors with rank F and G are custom made sensors

Markt Schwabener Str. 8
85464 Finsing
Germany

Tel.: +49 (0)8121-2574100
Fax: +49 (0)8121-2574101
Email: info@chenyang-gmbh.com
http://www.chenyang-gmbh.com

4. CHARACTERISTIC CURVES (only for references)

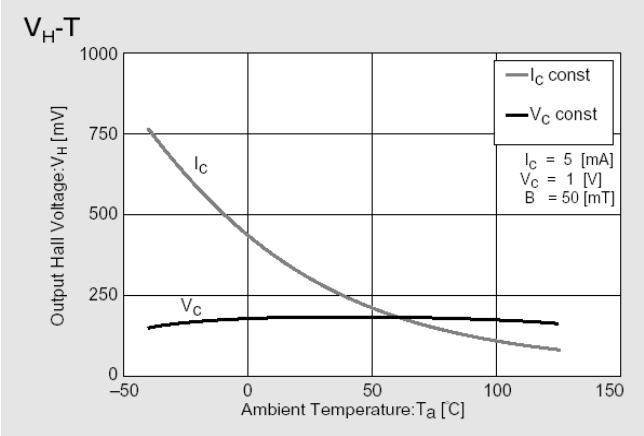

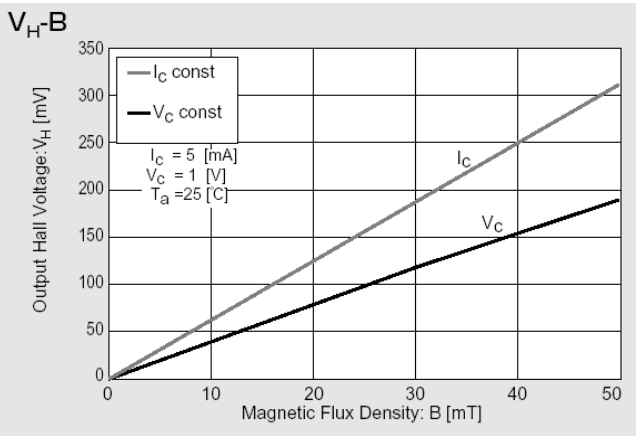

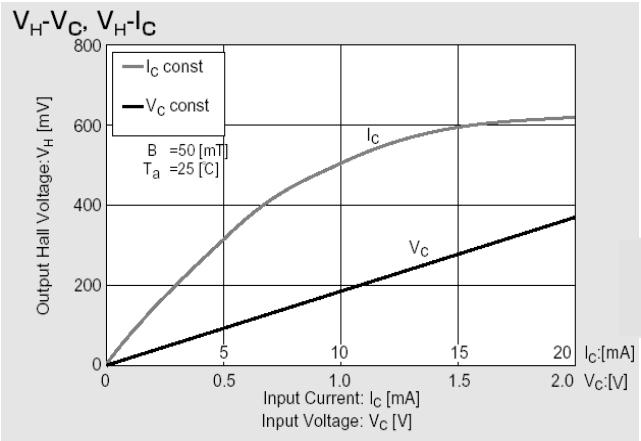

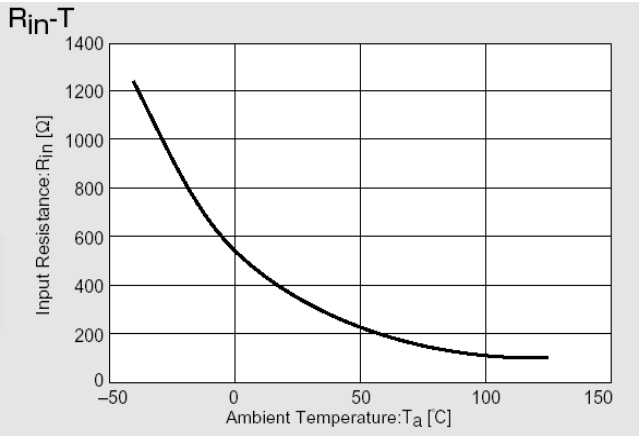

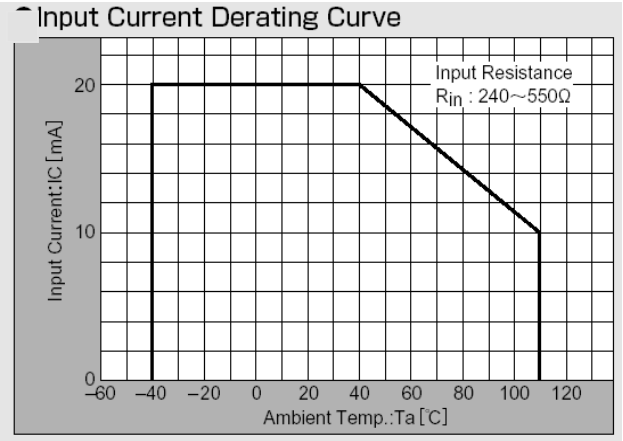

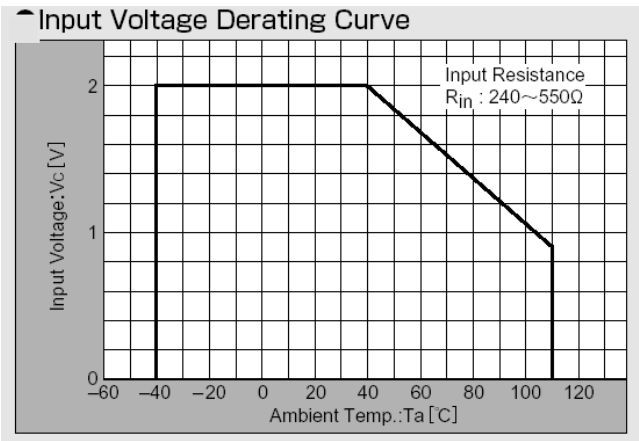

5. Connection

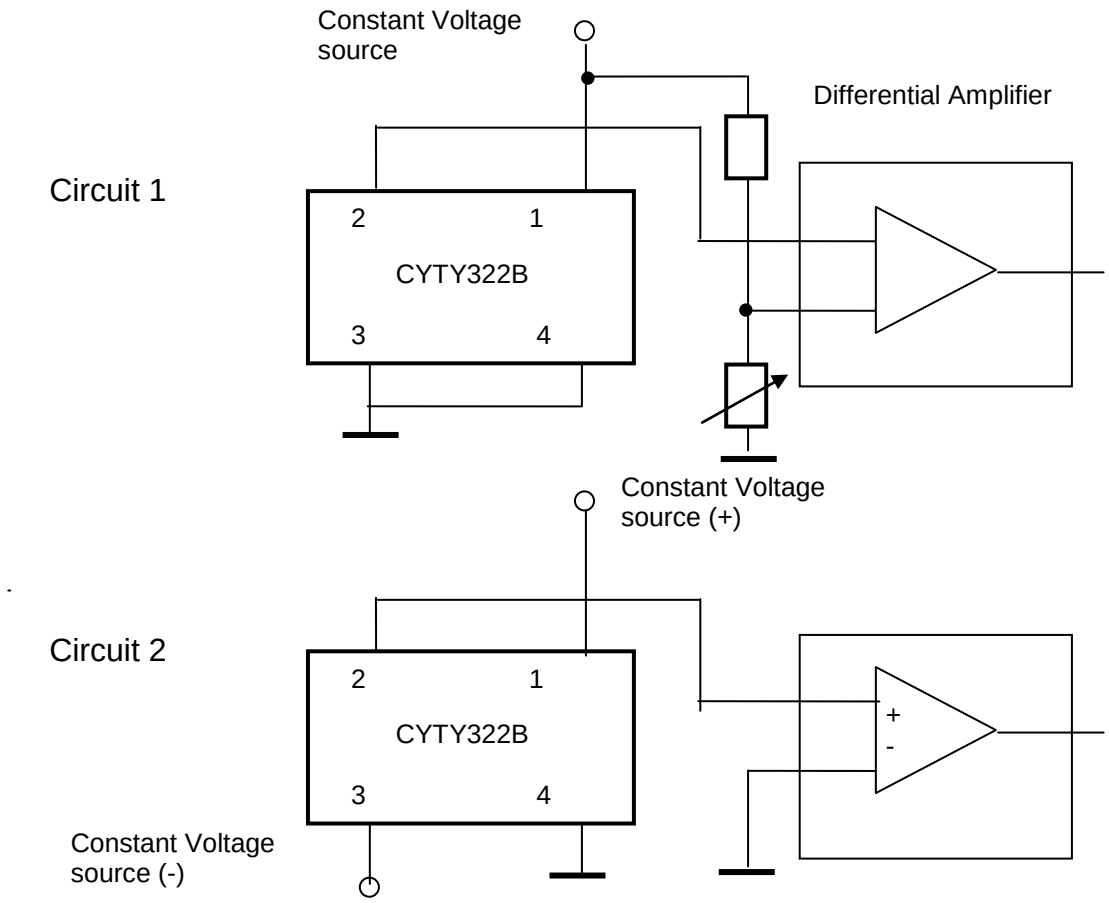

6. Application Notes

The Hall voltage V_H can be positive and negative. But if one connects the sensor as follows (circuit 1):

Pin 1:	positive input voltage V+, for instance +5VDC.
Pin 3:	GND
Pin 2:	OUTPUT
Pin 4:	GND

One can only measure the positive voltage at the pin 2. This means that the output voltage at zero magnetic field is not zero. This voltage is called as offset voltage. The output voltage in this case is not equal to the Hall voltage. The output voltage is equal to the sum of offset voltage and Hall voltage.

The offset voltage will be zero if you connect double power supplies V+ and V- to the sensor (circuit 2):

Pin 1:	positive input voltage V+, for instance +5VDC.
Pin 3:	negative input voltage V-, for instance -5VDC
Pin 2:	OUTPUT
Pin 4:	GND

In this case the output voltage is equal to the Hall Voltage.

7. External Dimensions (Unit: mm)

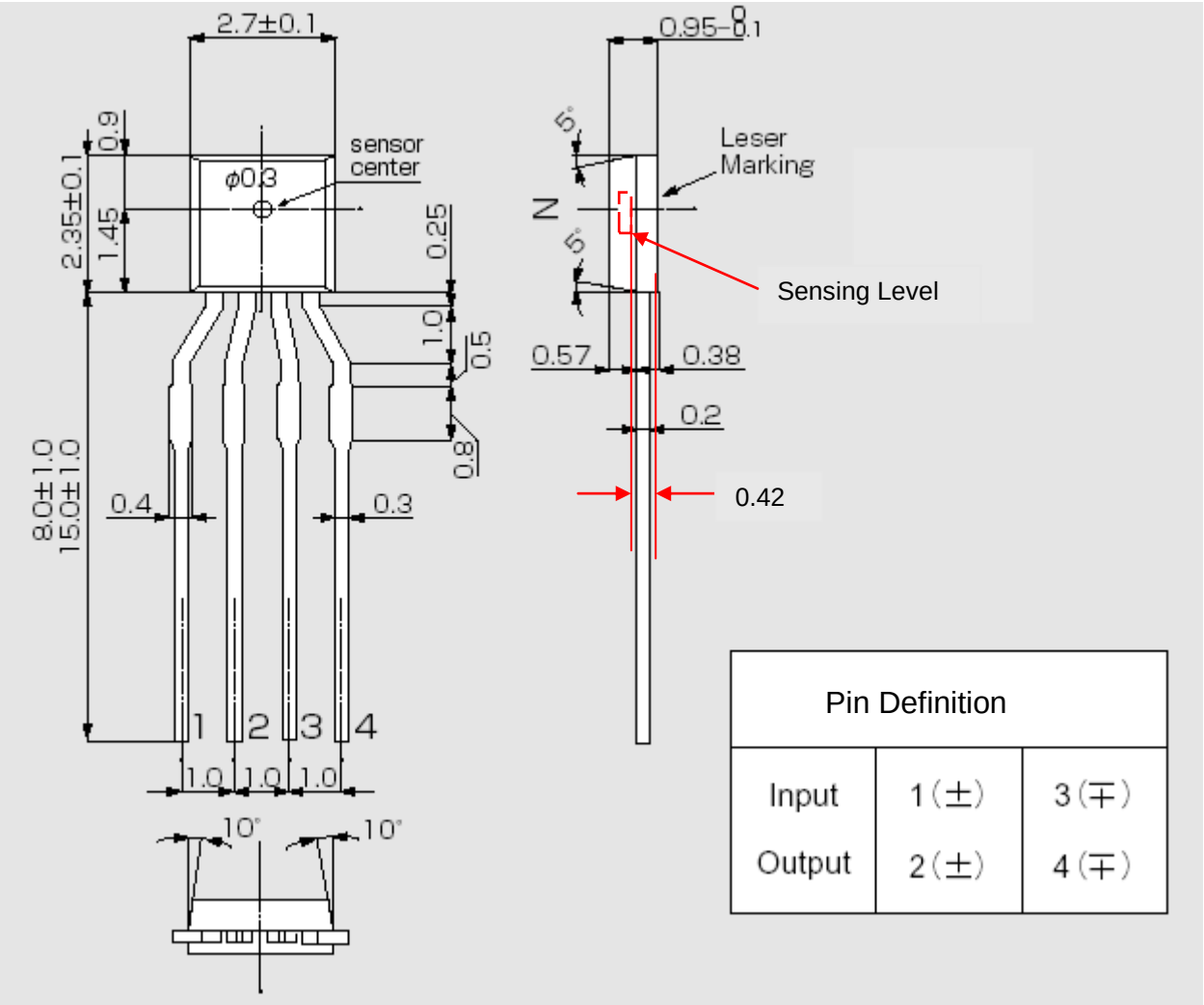

8. Method for Mounting

8-1. Soldering Conditions on PCB

4. No Rapid Heating and Cooling.
5. Recommended Preheating condition is at 130~150°C for 2~3minutes.
6. Recommended Reflowing condition is at 220~230°C for 10~15seconds.

8-2. Soldering Method and Temperature

Items	Methods	Temperature
Reflow	Soldering by Passing the Heated Zone	Max 250°C in 20sec
Solder Iron	Soldering by Soldering Iron	Max 300°C in 3sec

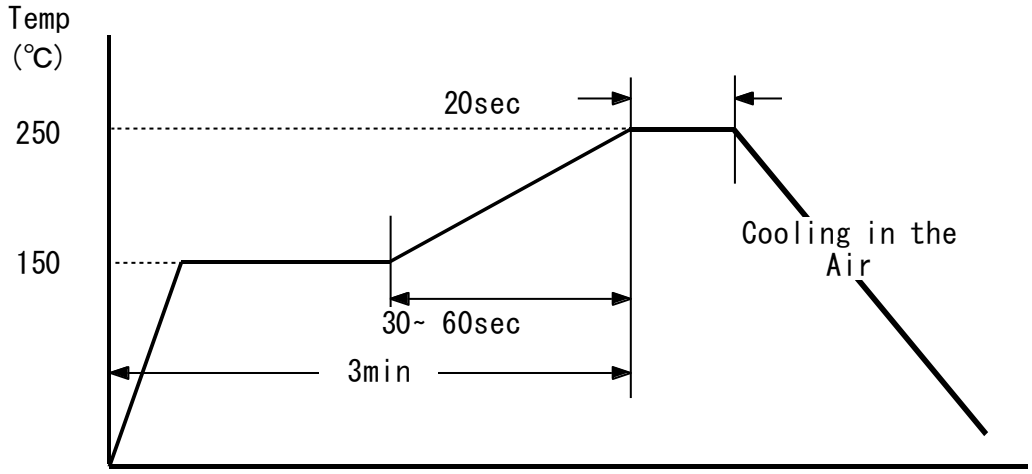

9. RELIABILITY

9.1 TEST CONDITION

	CONDITION
HIGH TEMP. STORAGE	Ta=110°C,t=1000HR
LOW TEMP. STORAGE	Ta=-40°C,t=1000HR
HIGH TEMP. OPERATION	Ta=100°C,Iopr=6mA,t=1000HR
LOW TEMP. OPERATION	Ta=-20°C,Iopr=6mA,t=1000HR
HIGH TEMP. HIGH UMIDITY OPERATION	Ta=60°C, HR=90%,Iopr=9mA,t=1000HR
HUMIDITY	Ta=60°C,HR=90%, t=1000HR
PCT	Ta=121°C,HR=100%, Pv=2atm, t=24HR
THERMAL SHOCK	T(L)=-55°C,T(H)=150°C, t=(L,H)=30min,M=30CYCLE
SOLDERING HEAT RESISTANCE	solder temp=250±5°C, t=10sec,REFLOW
SOLDABILITY	solder temp=230±5°C, t=5sec,dip
TERMINAL STRENGTH	TENSION 300g/30sec
SURGE	V=500V, C=200pF, R=0Ω (test method EIAJ EDX 8503)

9.2 CRITERION FOR JUDGING

After each reliability test, samples should be kept for at least 24 hrs at room temp. & humidity, and then measured. The change rates should be confined within the ranges as follows.

item	OK SPEC	NG/OK
ΔRin	UNDER ±20%	OK (SPEC SATISFYING)
ΔRout	UNDER ±20%	
ΔVH	UNDER ±20%	
ΔVo/VH	UNDER ± 5%	

CYTY922B InSb Hall Effect Element

Hall-effect element CYTY922B is made of compound semiconductor material indium stibnite (InSb), which utilizes the Hall-effect principle. It can convert a magnetic flux density signal linearly into voltage output.

FEATURES

- High Magnetic Sensitivity
- Low Offset Voltage
- Miniature Package

TYPICAL APPLICATION

- Magnetic Field Measurement
- Current Sensor
- Detection of Speed
- DC Brushless Motor
- Position Control

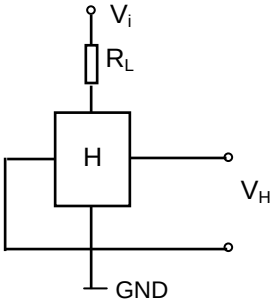

1. Maximum Ratings

(Ta=25°C)

Parameter	Symbol	Rating	Unit
Maximum Input Current	Imax	10 (at 25°C)	mA
Operating Temperature Range	Top	- 40 ~ + 110	°C
Storage Temperature Range	Tst	- 40 ~ + 125	°C

2. Electrical Characteristics (Measured at 25°C)

Parameter	Symbol	Measurement Conditions	Min	Max	Unit
Output Hall Voltage	VH	Vc = 1V, B = 50mT	228	370	mV
Input Resistance	Rin	B=0mT, I = 0.1mA	240	550	Ω
Output Resistance	Rout	B=0mT. I = 0.1mA	240	550	Ω
Offset Voltage	Vos	Vc = 1V, B = 0mT	- 7	+ 7	mV
Temp. Coeff. of VH	α	Ta = 0 ~ + 40°C AVG. B=50mT, Ic=1mA	-	- 1.8	% /°C
Temp. Coeff. of Rin, Rout	β	Ta = 0 ~ + 40°C AVG. B=5mT, Ic=5mA	-	- 1.8	% /°C
Dielectric strength		100V DC	1.0		MΩ

$V_H = V_{HM} - V_{OS}$ (V_{HM} : The output voltage measured at 50mT)

3. Rank Classification and Mark on Output Hall Voltage

Output Hall Voltage,VH (mV)	Rank	Measurement Conditions
228 ~ 274	E*	Vc = 1V, B = 50mT (Constant Voltage Drive)
266 ~ 320	F	
310 ~ 370	G	

*
Sensors with rank F and G are custom made sensors

Markt Schwabener Str. 8
85464 Finsing
Germany

Tel.: +49 (0)8121-2574100
Fax: +49 (0)8121-2574101
Email: info@chenyang-gmbh.com
http://www.chenyang-gmbh.com

4. CHARACTERISTIC CURVES (only for references)

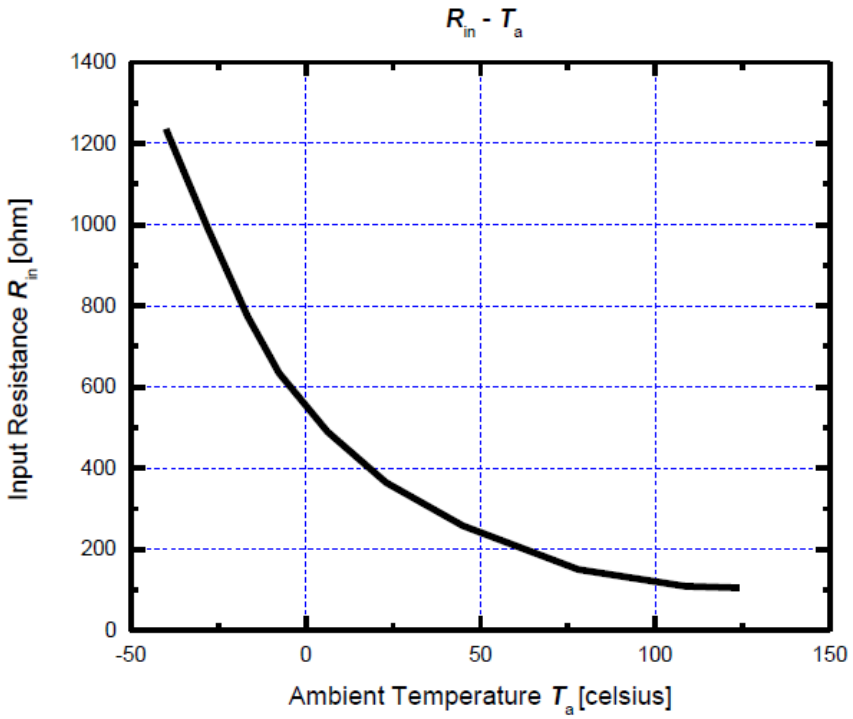

Fig. 1 Input resistance Rin as function of ambient temperature Ta

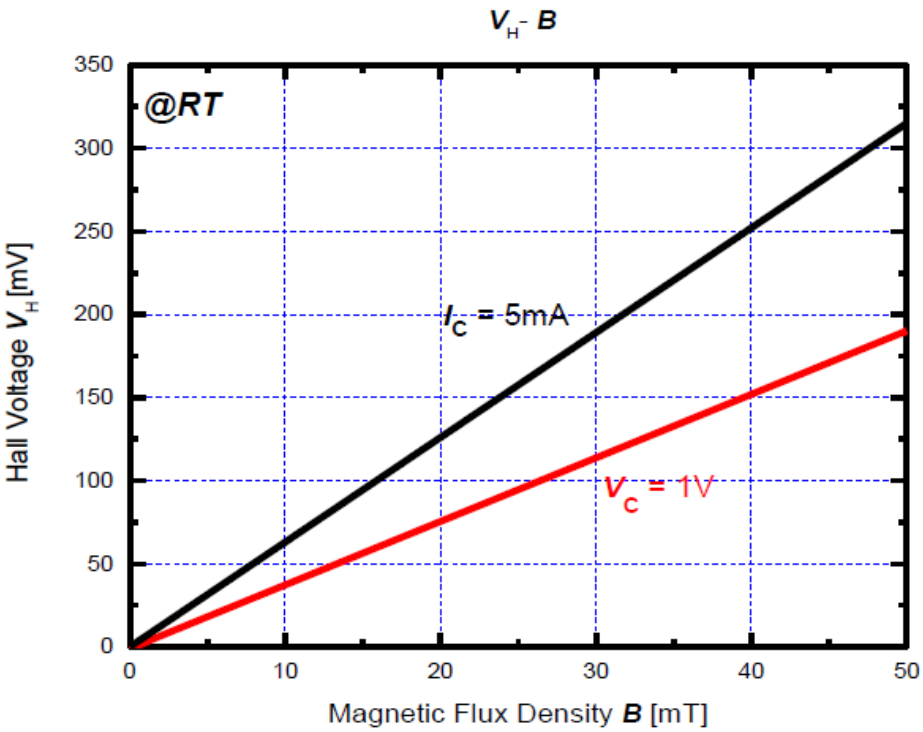

Fig. 2 Hall voltage V_H as function of magnetic flux density B

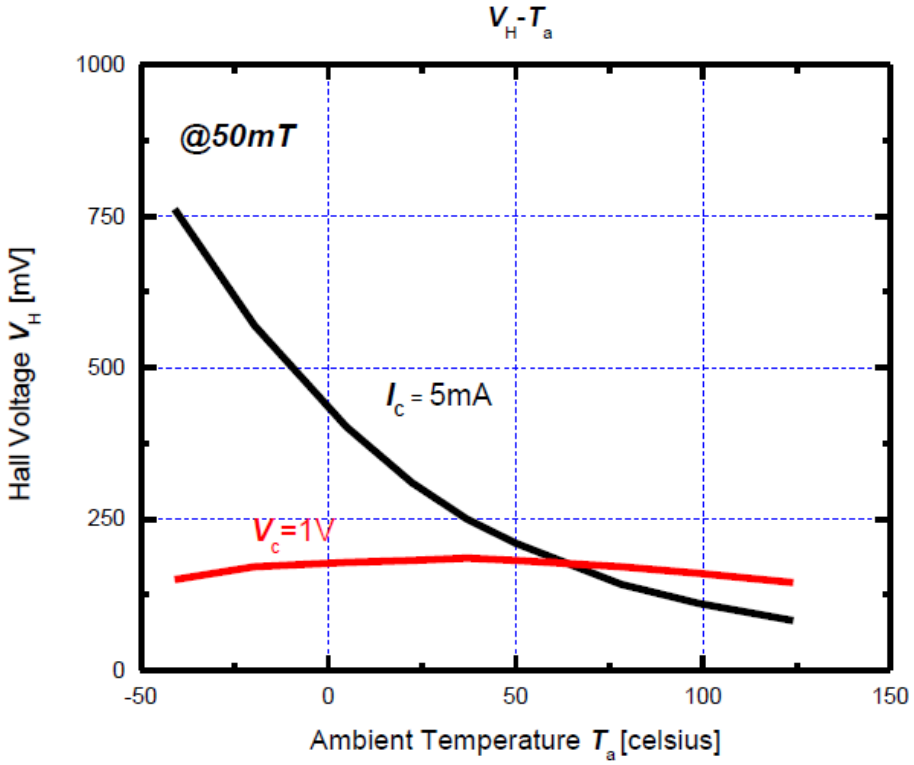

Fig. 3 Hall voltage V_H as function of ambient temperature Ta

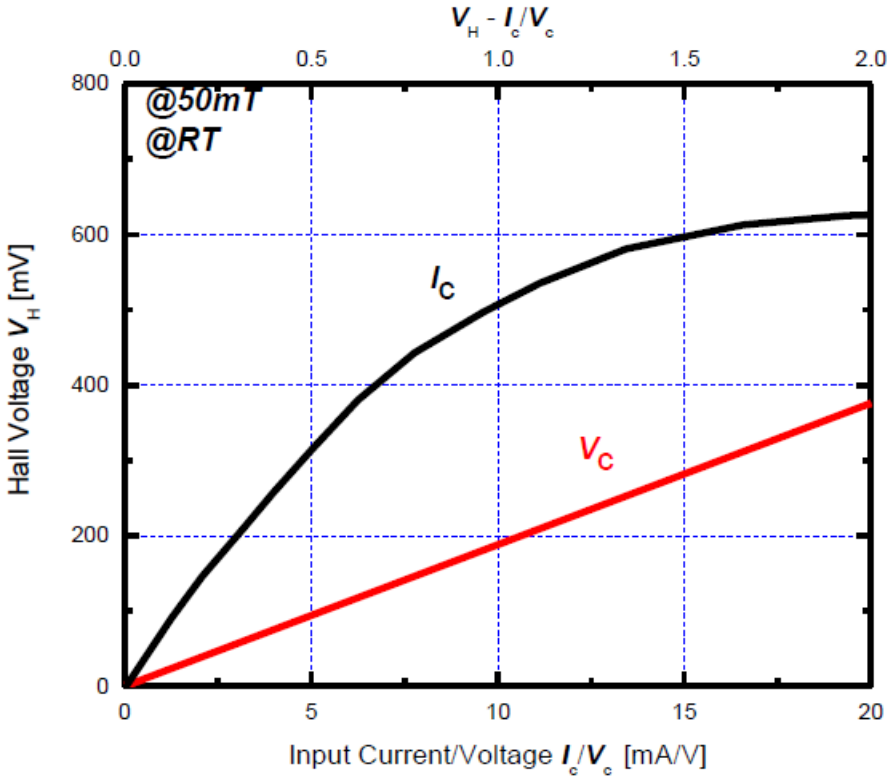

Fig. 4 Hall voltage V_H as function of electrical stimuli Ic/Vc

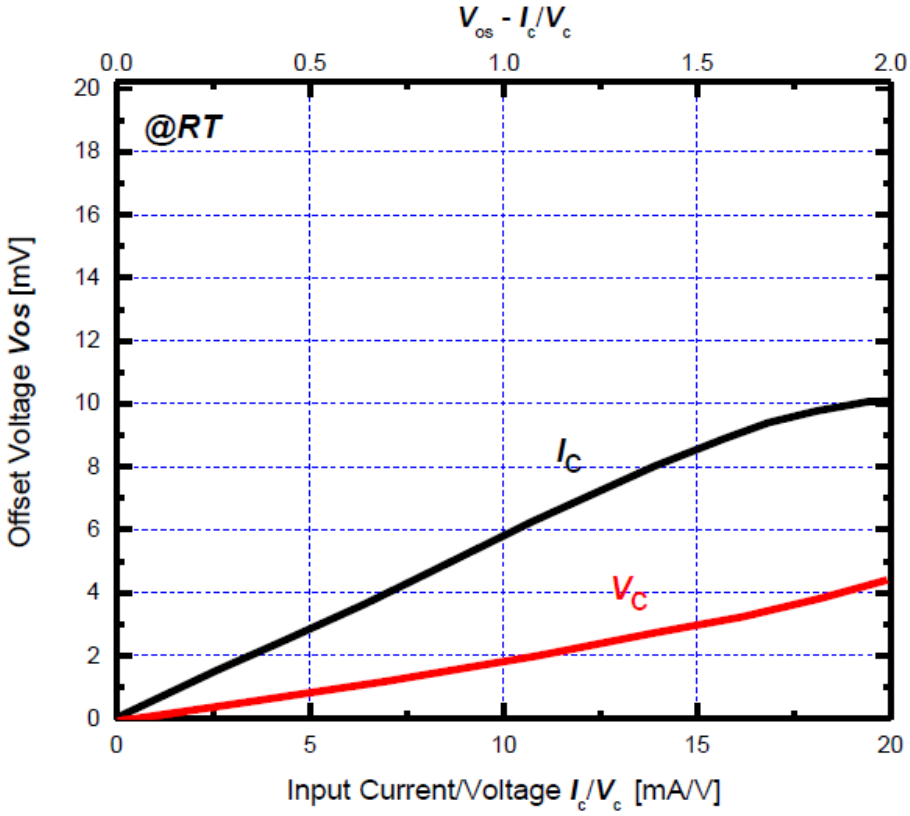

Fig. 5 Offset voltage V_{os} as function of electrical stimuli Ic/Vc

5. Connection

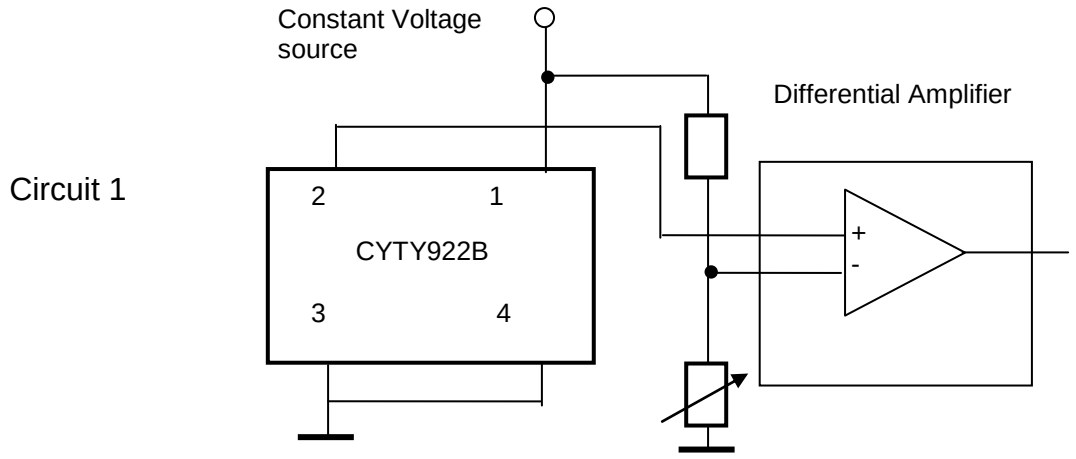

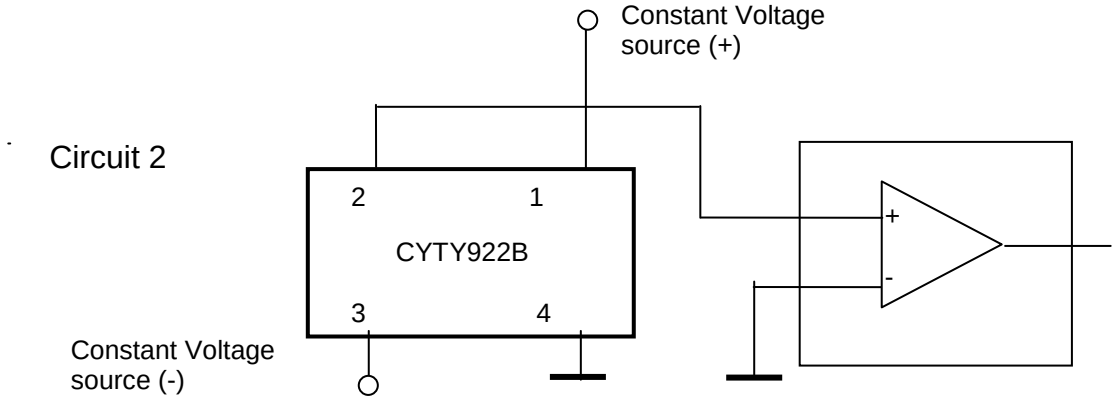

6. Application Notes

The Hall voltage V_H can be positive and negative. But if one connects the sensor as follows (circuit 1):

Pin 1:	positive input voltage V+, for instance +5VDC.
Pin 3:	GND
Pin 2:	OUTPUT
Pin 4:	GND

One can only measure the positive voltage at the pin 2. This means that the output voltage at zero magnetic field is not zero. This voltage is called as offset voltage. The output voltage in this case is not equal to the Hall voltage. The output voltage is equal to the sum of offset voltage and Hall voltage.

The offset voltage will be zero if you connect double power supplies V+ and V- to the sensor (circuit 2):

Pin 1:	positive input voltage V+, for instance +5VDC.
Pin 3:	negative input voltage V-, for instance -5VDC
Pin 2:	OUTPUT
Pin 4:	GND

In this case the output voltage is equal to the Hall Voltage.

7. External Dimensions (Unit: mm)

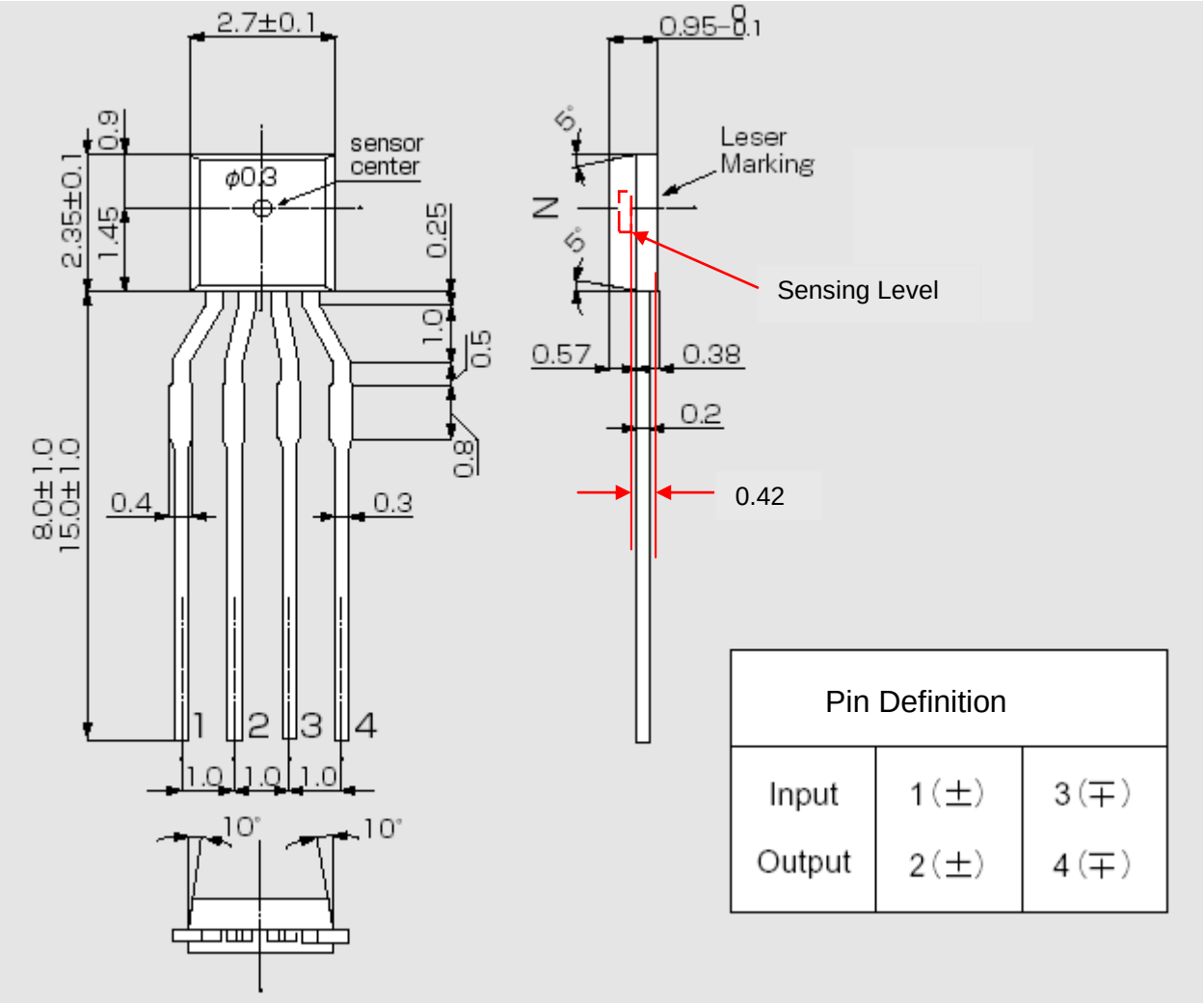

8. Method for Mounting

8-1. Soldering Conditions on PCB

1. No Rapid Heating and Cooling.
2. Recommended Preheating condition is at 130~150°C for 2~3minutes.
3. Recommended Reflowing condition is at 220~230°C for 10~15seconds.

8-2. Soldering Method and Temperature

Items	Methods	Temperature
Reflow	Soldering by Passing the Heated Zone	Max 250°C in 20sec
Solder Iron	Soldering by Soldering Iron	Max 300°C in 3sec

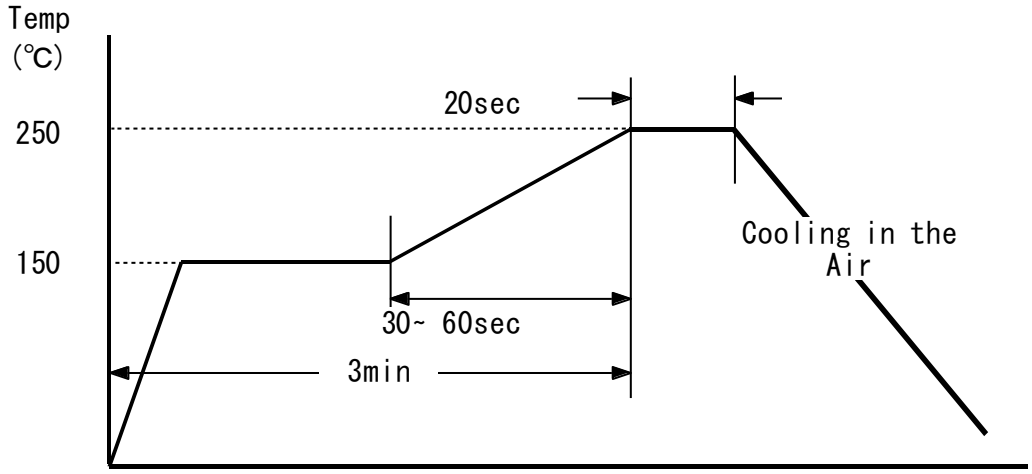

9. RELIABILITY

9.1 TEST CONDITION

	CONDITION
HIGH TEMP. STORAGE	Ta=110°C,t=1000HR
LOW TEMP. STORAGE	Ta=-40°C,t=1000HR
HIGH TEMP. OPERATION	Ta=100°C,Iopr=6mA,t=1000HR
LOW TEMP. OPERATION	Ta=-20°C,Iopr=6mA,t=1000HR
HIGH TEMP. HIGH UMIDITY OPERATION	Ta=60°C, HR=90%,Iopr=9mA,t=1000HR
HUMIDITY	Ta=60°C,HR=90%, t=1000HR
PCT	Ta=121°C,HR=100%, Pv=2atm, t=24HR
THERMAL SHOCK	T(L)=-55°C,T(H)=150°C, t=(L,H)=30min,M=30CYCLE
SOLDERING HEAT RESISTANCE	solder temp=250±5°C, t=10sec,REFLOW
SOLDABILITY	solder temp=230±5°C, t=5sec,dip
TERMINAL STRENGTH	TENSION 300g/30sec
SURGE	V=500V, C=200pF, R=0Ω (test method EIAJ EDX 8503)

9.2 CRITERION FOR JUDGING

After each reliability test, samples should be kept for at least 24 hrs at room temp. & humidity, and then measured. The change rates should be confined within the ranges as follows.

item	OK SPEC	NG/OK
ΔRin	UNDER ±20%	OK (SPEC SATISFYING)
ΔRout	UNDER ±20%	
ΔVH	UNDER ±20%	
ΔVo/VH	UNDER ± 5%	