Catalogue

Unipolar & Omni-polar Hall Effect Switch IC

Copyright© 2021, ChenYang Technologies GmbH & Co. KG

All rights reserved. No part of this catalogue may be reproduced,
stored in a retrieval system or transmitted in any form or by any means,
electronic, mechanical, photocopying, recording or otherwise,
without the prior permission of the copyright holder.

Contact Address:

Markt Schwabener Str. 8
D-85464 Finsing
Germany

Tel: +49 (0)8121-2574100
Fax: +49 (0)8121-2574101
Email: info@chenyang.de
http://www.chenyang.de

Content

Unipolar Hall Effect Switch ICs 3
High-Sensitive Unipolar Hall Effect Switch CYD421 3
High-Sensitive Unipolar Hall Effect Switch CYD503 8
Unipolar Hall Effect Switch CYD506 13
Unipolar Hall Effect Switch CYD507 18
High-Sensitive Unipolar Hall Effect Switch CYD508 23
High-Sensitive Unipolar Hall Effect Switch CYD509 28
Unipolar Hall Effect Switch CYD510 33
Unipolar Hall Effect Switch CYD511 38
High-Sensitive Unipolar Hall Effect Switch CYD9636 43
High-Sensitive Unipolar Hall Effect Switch CYD9639 49
General Purpose Unipolar Hall Effect Switch CYD3623 55
General Purpose Unipolar Hall Effect Switch CYD9821A 59
General Purpose Unipolar Hall Effect Switch CYD9821B 65
CYD443H Unipolar HALL-EFFECT SWITCH IC 71
CYD3141E and CYD3144E HALL-EFFECT SWITCH IC 74
CYD543 Hall Effect Unipolar IC Switches 77
CYD1102G Unipolar Hall Effect Switch ICs 80

Omni-polar Hall Effect Switch ICs 86
CYD3661-BC Micropower Ultra-Sensitivity Hall Effect Sensors 86
CYD2462 High Sensitivity Omnipolar Hall Effect Switch 90

ChenYang
Technologies GmbH & Co. KG

Unipolar Hall Effect Switch ICs
High-Sensitive Unipolar Hall Effect Switch CYD421

Applications

- Automotive brake pedal position detection
- Proximity detection
- Speed measurement
- Weak magnetic field applications
- Solid state switches etc.

Package Type
P/N: CYD421-XX

TO92S (UA)

SOT23 (LH)

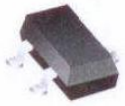

Features

- 3.8V to 40V operation voltage
- Overvoltage protection capability up to 40 V
- High accuracy unipolar switch
- Built-in dynamic offset cancellation
- Open drain output
- Low thermal drift of magnetic sensing
- Qualified according to AEC-Q100 test standard

Order Information

- CYD421-PA
  Package (PA): UA, LH

Specifications

Absolute Maximum Ratings (T_A=25°C)

Parameter	Symbol	Conditions	Rating	Unit
Maximum supply voltage	V_{DDMAX}		60	V
Reverse voltage	$-V_{DDMAX}$		-60	V
Operating temperature	T_A		-40~+125	°C
Storage temperature	T_S		-40~+165	°C
Maximum output sink current	I_{OMAX}		40	mA

Electrical Characteristics (T_A=25°C, V_{DD}=5VDC)

Characteristic	Symbol	Test Condition	Min.	Typ.	Max.	Unit
Supply voltage	V_{DD}		3.8		40	V
Saturation voltage output	$V_{OL(ON)}$	@I_{OUT} = 20mA			0.4	V
Output leakage current	I_{OH}	Output switch off			10	µA
Supply current	I_{DD}	Output open		6	9	mA
Output voltage fall time	t_f	R_L=1kΩ; C_L=20pF			1.5	µs
Output voltage rise time	t_r				1	µs

Magnetic Characteristics (T_A=25°C, V_{DD}=5VDC)

Characteristic	Symbol	Test Condition	Min.	Typ.	Max.	Unit
Operating point	B_{OP}	Pullup resistor R_L=1kΩ, Load capacitor C_L=20pF	30	60	80	G
Release point	B_{RP}		10	40	60	G
Hysteresis	B_{HYS}		10	20	40	G

Markt Schwabener Str. 8
85464 Finsing
Germany

Tel.: +49 (0)8121-2574100
Fax: +49 (0)8121-2574101
Email: info@chenyang-gmbh.com
http://www.chenyang-gmbh.com

General Specifications

CYD421, unipolar Hall effect switch, designed with Bipolar technology, is south sensitive unipolar Hall Effect switch and includes on-chip Hall element voltage generator, a voltage regulator for operation with supply voltages of 3.8 to 40V, reverse voltage protection, temperature compensation circuitry, small-signal amplifier, Schmitt trigger and an open-collector output.

The sensor is designed to respond to South poles. While the magnetic flux density(B) is larger than operate point Bop, the output will be turned on with low output level. Then the output is held until the magnetic flux (B) is lower than release point Brp. The output will be turned off with high output level.

CYD421 offers a variety of packages, including TO92S, SOT23. All packages are RoHS compliant.

The architecture block diagram is shown in Fig. 1.

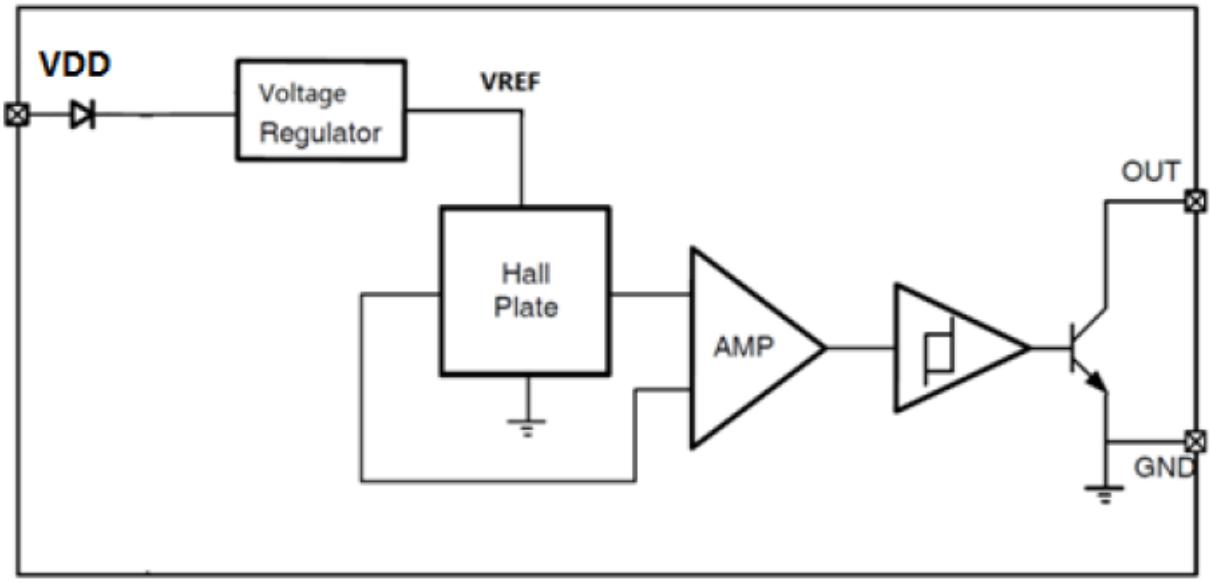

Application Circuits

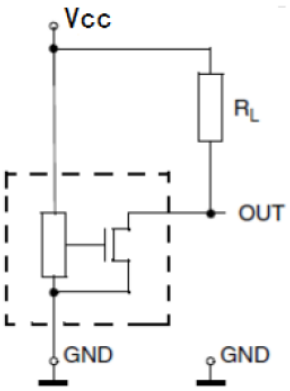

Circuit 1

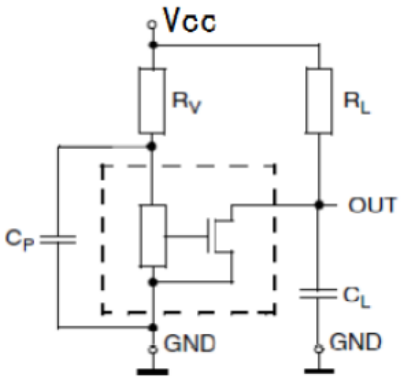

Circuit 2

For applications with disturbances on the supply line or radiated disturbances, a series resistor R_V and two capacitors C_P and C_L, all placed close to the sensor, are recommended.

For example:
R_V =100Ω
C_P = 4.7 nF
C_L = 1 nF.
R_L= 1k~10k Ω

Markt Schwabener Str. 8
85464 Finsing
Germany

Tel.: +49 (0)8121-2574100
Fax: +49 (0)8121-2574101
Email: info@chenyang-gmbh.com
http://www.chenyang-gmbh.com

Application Example

A positive magnetic field is defined as a South Pole near to the marked side of the TO92S package. For the SOT23 package the positive magnetic field is defined as a North Pole near to the marked side.

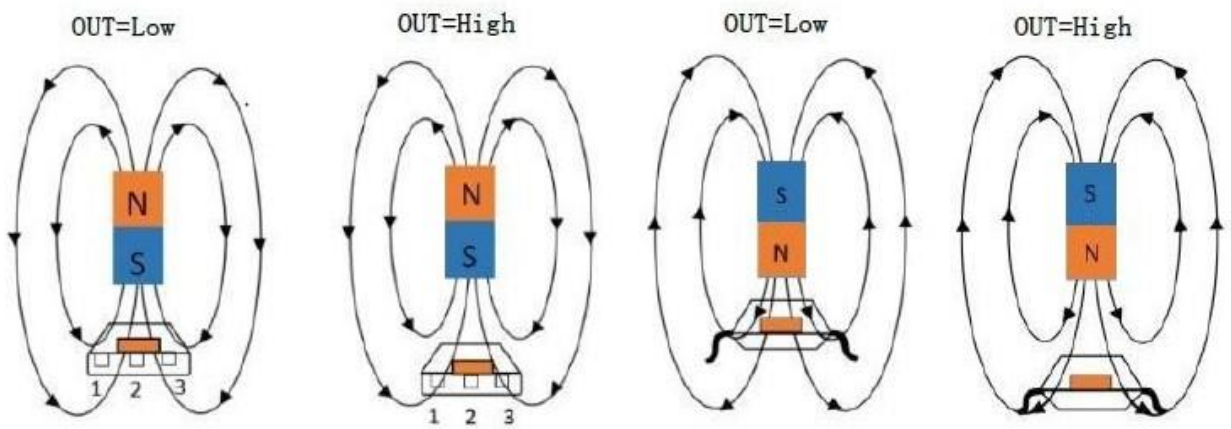

a) PO92 b) PO92 c) SOT23 d) SOT23

Output is low at a small sensing distance between magnet and sensor, for case a) and c)
Output is high at a large sensing distance between magnet and sensor, for case b) and d)

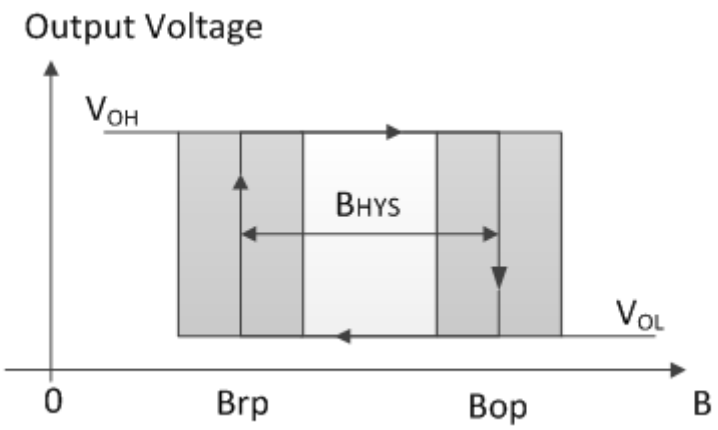

Output behavior of CYD421

ESD Test

The output pin has to be in tri-state (high impedance) for ESD measurements

Symbol	Parameter	Min	Max	Unit
V_{HBM}	Human body model (according to AEC Q100-002)	-4	4	kV

Package Outline
TO92S (UA)
(Packing: bulk, 1000pcs/bag)

Pin Assignment

Pin No.	Name	Function
1	Vcc	Power supply
2	GND	Ground
3	Vout	Output

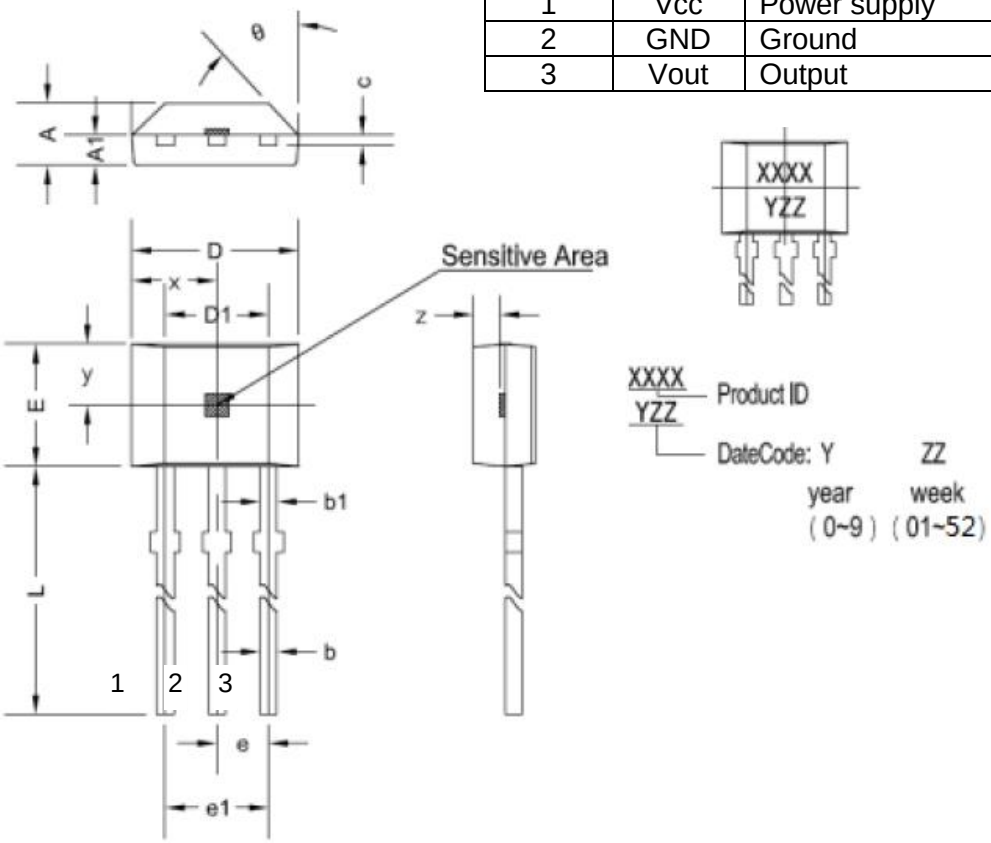

Symbol	Size (mm)		Size (in inches)	
	Min.	Max.	Min.	Max.
A	1.42	1.67	0.056	0.066
A1	0.66	0.86	0.026	0.034
b	0.35	0.56	0.014	0.022
b1	0.40	0.55	0.016	0.022
C	0.36	0.51	0.014	0.020
D	3.90	4.20	0.154	0.165
D1	2.97	3.27	0.117	0.129
E	2.90	3.28	0.114	0.129
e	1.27 typ.		0.050 tpy.	
e1	2.44	2.64	0.096	0.104
L	13.5	15.5	0.531	0.610
x	2.03 typ.		0.080 typ.	
y	1.55 typ.		0.061 typ.	
z	0.50 typ.		0.020 typ.	
θ	45° typ.		45° typ.	

Markt Schwabener Str. 8
85464 Finsing
Germany

Tel.: +49 (0)8121-2574100
Fax: +49 (0)8121-2574101
Email: info@chenyang-gmbh.com
http://www.chenyang-gmbh.com

Package Outline
SOT23(LH)
(Packing: Tape&Reel, 3000pcs/reel)

Pin Assignment

Pin No.	Name	Function
1	Vcc	Power supply
2	GND	Ground
3	Vout	Output

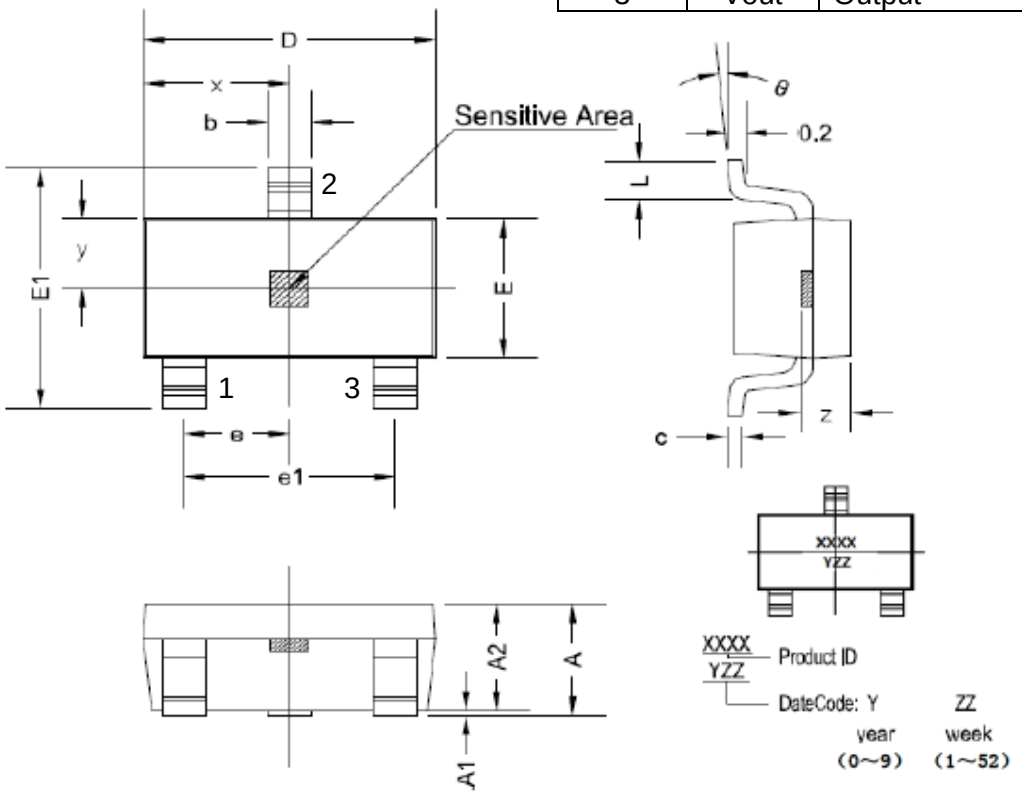

Symbol	Size (mm)		Size (in inches)	
	Min.	Max.	Min.	Max.
A	1.05	1.25	0.041	0.049
A1	0	0.10	0	0.004
A2	1.05	1.15	0.041	0.045
b	0.30	0.50	0.012	0.020
c	0.10	0.20	0.004	0.008
D	2.82	3.02	0.111	0.119
E	1.50	1.70	0.059	0.067
E1	2.65	2.95	0.104	0.116
e	0.95 typ.		0.037 tpy.	
e1	1.80	2.00	0.071	0.079
L	0.30	0.60	0.012	0.024
x	1.46 typ.		0.057 typ.	
y	0.80 typ.		0.032 typ.	
z	0.60 typ.		0.024 typ.	
θ	0°	8°	0°	8°

High-Sensitive Unipolar Hall Effect Switch CYD503

Applications

- Automotive brake pedal position detection
- Proximity detection
- Speed measurement
- Weak magnetic field applications
- Solid state switches etc.

Package Type
P/N: CYD503-XX

TO92S (UA)

SOT23-3L (LH)

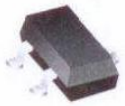

Features

- 2.7V to 30V operation voltage
- Overvoltage protection capability up to 40 V
- High accuracy unipolar switch
- Built-in dynamic offset cancellation
- Open drain output
- Low thermal drift of magnetic sensing
- Qualified according to AEC-Q100 test standard

Order Information

- CYD503-PA
  Package (PA): UA, LH

Specifications

Absolute Maximum Ratings (T_A=25°C)

Parameter	Symbol	Conditions	Rating	Unit
Maximum supply voltage	V_{DDMAX}		30	V
Operating temperature	T_A		-40~+150	°C
Storage temperature	T_S		-40~+165	°C
Maximum output current	I_{OMAX}		25	mA

Electrical Characteristics (T_A=25°C, V_{DD}=12VDC)

Characteristic	Symbol	Test Condition	Min.	Typ.	Max.	Unit
Supply voltage	V_{DD}		2.7		30	V
Supply current	I_{DD}	Output open		2.5	3.2	mA
Low output voltage	$V_{OL(ON)}$	@I_{OUT} = 20mA		130	400	mV
Output leakage current	I_{OH}	Output switch off			0.1	µA
Output voltage	V_{OUT}				30	V
Output voltage fall time	t_f	V_{DD}=12V; R_L=820Ω; C_L=20pF			1	µs
Output voltage rise time	t_r				1	µs
Delay time	t_d			18		µs

Magnetic Characteristics (T_A=25°C, V_{DD}=12VDC)

Characteristic	Symbol	Test Condition	Min.	Typ.	Max.	Unit
Operating point (On point)	B_{OP}	Pullup resistor R_L=1kΩ, Load capacitor C_L=20pF	38	55	72	G
Release point (Off point)	B_{RP}		20	35	50	G
Hysteresis	B_{HYS}		15	20	27	G
Temperature coefficient	Tc			-1000		ppm/°C

Markt Schwabener Str. 8
85464 Finsing
Germany

Tel.: +49 (0)8121-2574100
Fax: +49 (0)8121-2574101
Email: info@chenyang-gmbh.com
http://www.chenyang-gmbh.com

General Specifications

CYD503 Hall Effect Switch is a monolithic integrated circuit which switches in response to magnetic field. If a magnetic field with flux lines perpendicular to the sensitive area is applied to the sensor, the biased Hall plate forces a Hall voltage proportional to this field. The Hall voltage is compared with the actual threshold level in the comparator. If the magnetic field exceeds the threshold levels, the output stage is switched to the appropriate state. The built-in hysteresis eliminates oscillation and provides switching behavior of output without bouncing.

Magnetic offset caused by mechanical stress is compensated by using the chopping offset compensation technique. A serial resistor or diode on the supply line is not required thanks to the built-in reverse voltage protection.

The open drain output is forced to a safe, high-impedance state (tri-state), in any of the following fault conditions: overtemperature, and undervoltage. In addition, the output current is limited (short-circuit protection).
The device is able to withstand a maximum supply voltage of 28 V for unlimited time and features overvoltage capability (40V load dump). The architecture block diagram is shown in the following Fig.

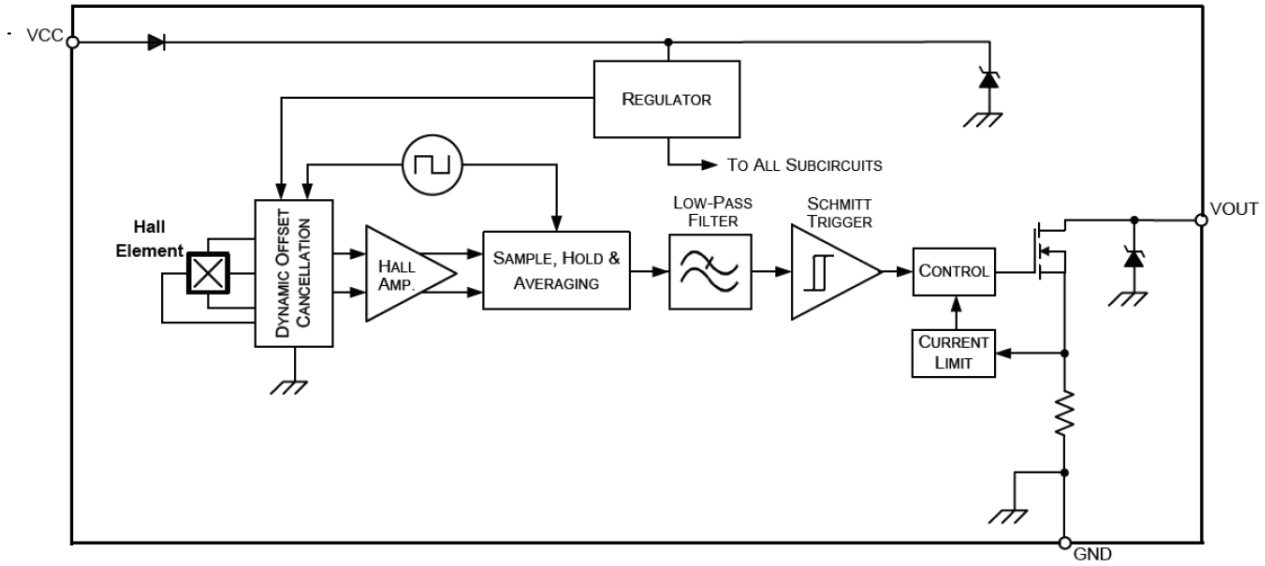

Application Circuits

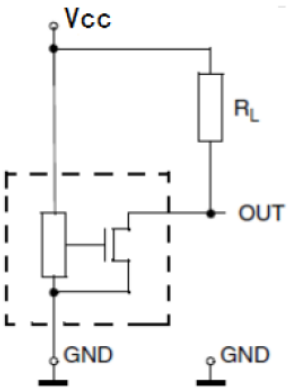

Circuit 1

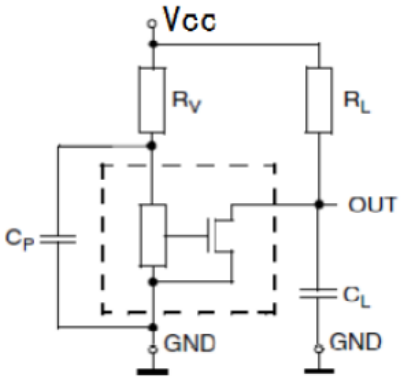

Circuit 2

For applications with disturbances on the supply line or radiated disturbances, a series resistor R_V and two capacitors C_P and C_L, all placed close to the sensor, are recommended.

For example:
R_V =100Ω
C_P = 4.7 nF
C_L = 1 nF.
R_L= 1k~10k Ω

Markt Schwabener Str. 8
85464 Finsing
Germany

Tel.: +49 (0)8121-2574100
Fax: +49 (0)8121-2574101
Email: info@chenyang-gmbh.com
http://www.chenyang-gmbh.com

Application Example

A positive magnetic field is defined as a South Pole near to the marked side of the TO92S package. For the SOT23 package the positive magnetic field is defined as a North Pole near to the marked side.

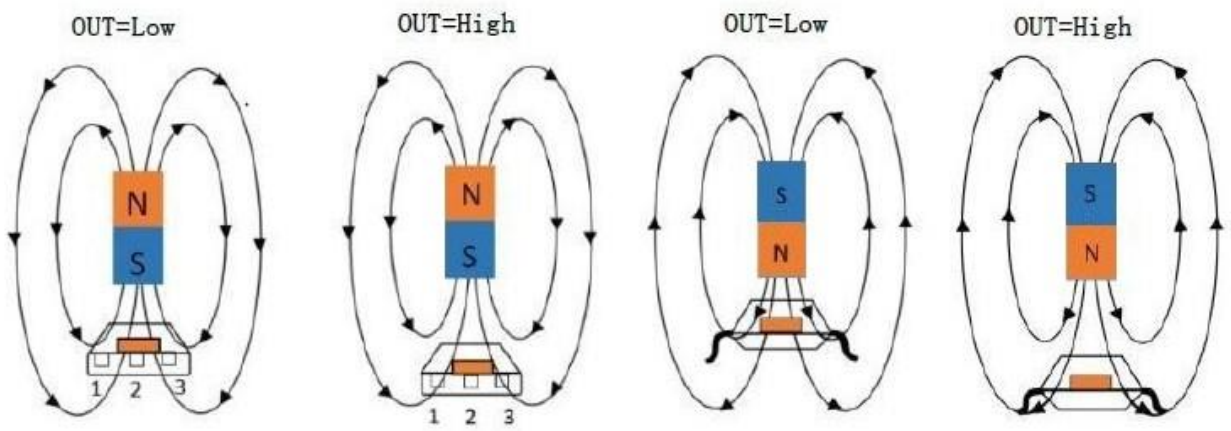

b) PO92 b) PO92 c) SOT23 d) SOT23

Output is low at a small sensing distance between magnet and sensor, for case a) and c)
Output is high at a large sensing distance between magnet and sensor, for case b) and d)

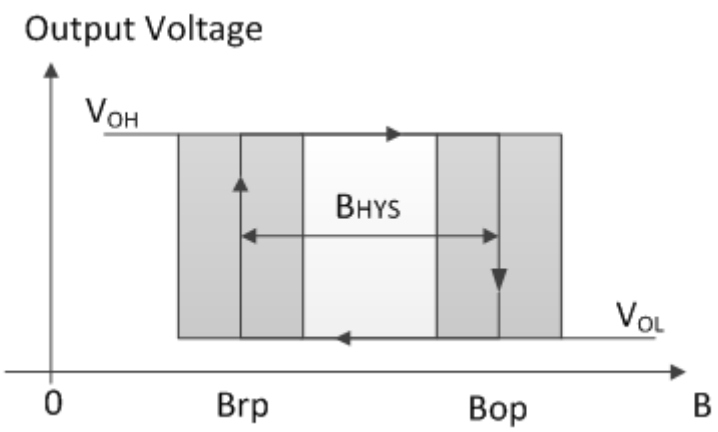

Output behavior of CYD503

ESD Test

The output pin has to be in tri-state (high impedance) for ESD measurements

Symbol	Parameter	Min	Max	Unit
V_{HBM}	Human body model (according to AEC Q100-002)	-12	12	kV

Package Outline
TO92S (UA)
(Packing: bulk, 1000pcs/bag)

Pin Assignment

Pin No.	Name	Function
1	Vcc	Power supply
2	GND	Ground
3	Vout	Output

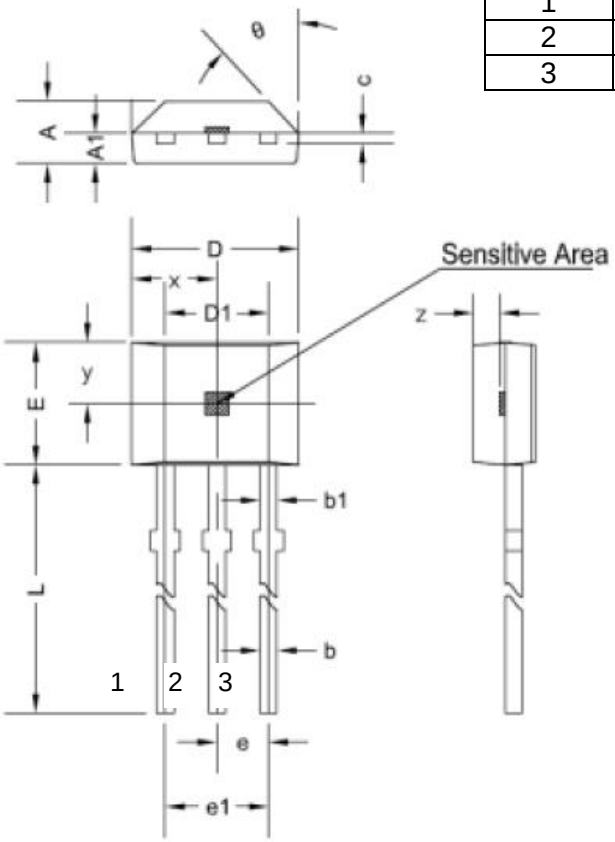

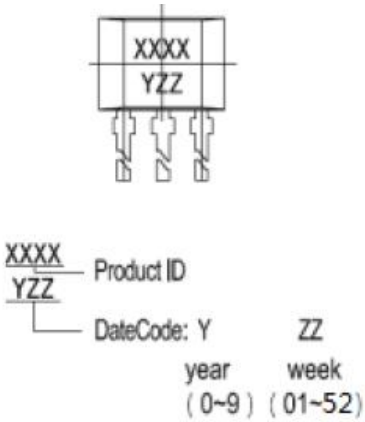

Symbol	Size (mm)		Size (in inches)	
	Min.	Max.	Min.	Max.
A	1.42	1.67	0.056	0.066
A1	0.66	0.86	0.026	0.034
b	0.35	0.56	0.014	0.022
b1	0.40	0.55	0.016	0.022
C	0.36	0.51	0.014	0.020
D	3.90	4.20	0.154	0.165
D1	2.97	3.27	0.117	0.129
E	2.90	3.28	0.114	0.129
e	1.27 typ.		0.050 tpy.	
e1	2.44	2.64	0.096	0.104
L	13.5	15.5	0.531	0.610
x	2.03 typ.		0.080 typ.	
y	1.55 typ.		0.061 typ.	
z	0.50 typ.		0.020 typ.	
θ	45° typ.		45° typ.	

Markt Schwabener Str. 8
85464 Finsing
Germany

Tel.: +49 (0)8121-2574100
Fax: +49 (0)8121-2574101
Email: info@chenyang-gmbh.com
http://www.chenyang-gmbh.com

Package Outline
SOT23-3L(LH)
(Packing: Tape&Reel, 3000pcs/reel)

Pin Assignment

Pin No.	Name	Function
1	Vcc	Power supply
2	GND	Ground
3	Vout	Output

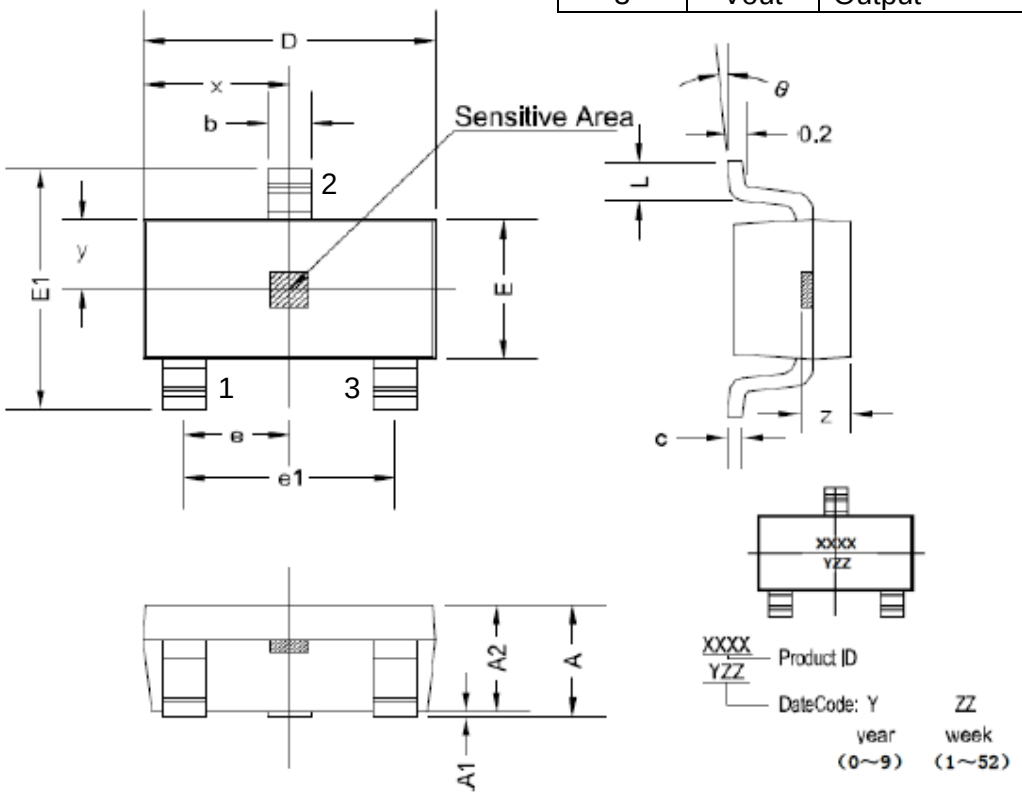

Symbol	Size (mm)		Size (in inches)	
	Min.	Max.	Min.	Max.
A	1.05	1.25	0.041	0.049
A1	0	0.10	0	0.004
A2	1.05	1.15	0.041	0.045
b	0.30	0.50	0.012	0.020
c	0.10	0.20	0.004	0.008
D	2.82	3.02	0.111	0.119
E	1.50	1.70	0.059	0.067
E1	2.65	2.95	0.104	0.116
e	0.95 typ.		0.037 tpy.	
e1	1.80	2.00	0.071	0.079
L	0.30	0.60	0.012	0.024
x	1.46 typ.		0.057 typ.	
y	0.80 typ.		0.032 typ.	
z	0.60 typ.		0.024 typ.	
θ	0°	8°	0°	8°

Markt Schwabener Str. 8
85464 Finsing
Germany

Tel.: +49 (0)8121-2574100
Fax: +49 (0)8121-2574101
Email: info@chenyang-gmbh.com
http://www.chenyang-gmbh.com

Unipolar Hall Effect Switch CYD506

Applications

- Automotive brake pedal position detection
- Proximity detection
- Speed measurement
- Weak magnetic field applications
- Solid state switches etc.

Package Type
P/N: CYD506-XX

TO92S (UA)

SOT23-3L (LH)

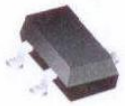

Features

- 2.7V to 30V operation voltage
- Overvoltage protection capability up to 40 V
- High accuracy unipolar switch
- Built-in dynamic offset cancellation
- Open drain output
- Low thermal drift of magnetic sensing
- Qualified according to AEC-Q100 test standard

Order Information

- CYD506-PA
  Package (PA): UA, LH

Specifications

Absolute Maximum Ratings (T_A=25°C)

Parameter	Symbol	Conditions	Rating	Unit
Maximum supply voltage	V_{DDMAX}		30	V
Operating temperature	T_A		-40~+150	°C
Storage temperature	T_S		-40~+165	°C
Maximum output current	I_{OMAX}		25	mA

Electrical Characteristics (T_A=25°C, V_{DD}=12VDC)

Characteristic	Symbol	Test Condition	Min.	Typ.	Max.	Unit
Supply voltage	V_{DD}		2.7		30	V
Supply current	I_{DD}	Output open		2.5	3.2	mA
Low output voltage	$V_{OL(ON)}$	@I_{OUT} = 20mA		130	400	mV
Output leakage current	I_{OH}	Output switch off			0.1	µA
Output voltage	V_{OUT}				30	V
Output voltage fall time	t_f	V_{DD}=12V; R1=820Ω; C1=20pF			1	µs
Output voltage rise time	t_r				1	µs
Delay time	t_d			18		µs

Magnetic Characteristics (T_A=25°C, V_{DD}=12VDC)

Characteristic	Symbol	Test Condition	Min.	Typ.	Max.	Unit
Operating point (On point)	B_{OP}	Pullup resistor R_L=1kΩ, Load capacitor C_L=20pF		18		mT
Release point (OFF point)	B_{RP}			16		mT
Hysteresis	B_{HYS}			2		mT
Temperature coefficient	Tc			-1000		ppm/°C

Markt Schwabener Str. 8
85464 Finsing
Germany

Tel.: +49 (0)8121-2574100
Fax: +49 (0)8121-2574101
Email: info@chenyang-gmbh.com
http://www.chenyang-gmbh.com

General Specifications

CYD506 Hall Effect Switch is a monolithic integrated circuit which switches in response to magnetic field. If a magnetic field with flux lines perpendicular to the sensitive area is applied to the sensor, the biased Hall plate forces a Hall voltage proportional to this field. The Hall voltage is compared with the actual threshold level in the comparator. If the magnetic field exceeds the threshold levels, the output stage is switched to the appropriate state. The built-in hysteresis eliminates oscillation and provides switching behavior of output without bouncing.

Magnetic offset caused by mechanical stress is compensated by using the chopping offset compensation technique. A serial resistor or diode on the supply line is not required thanks to the built-in reverse voltage protection.

The open drain output is forced to a safe, high-impedance state (tri-state), in any of the following fault conditions: overtemperature, and undervoltage. In addition, the output current is limited (short-circuit protection).
The device is able to withstand a maximum supply voltage of 28 V for unlimited time and features overvoltage capability (40V load dump). The architecture block diagram is shown in the following Fig.

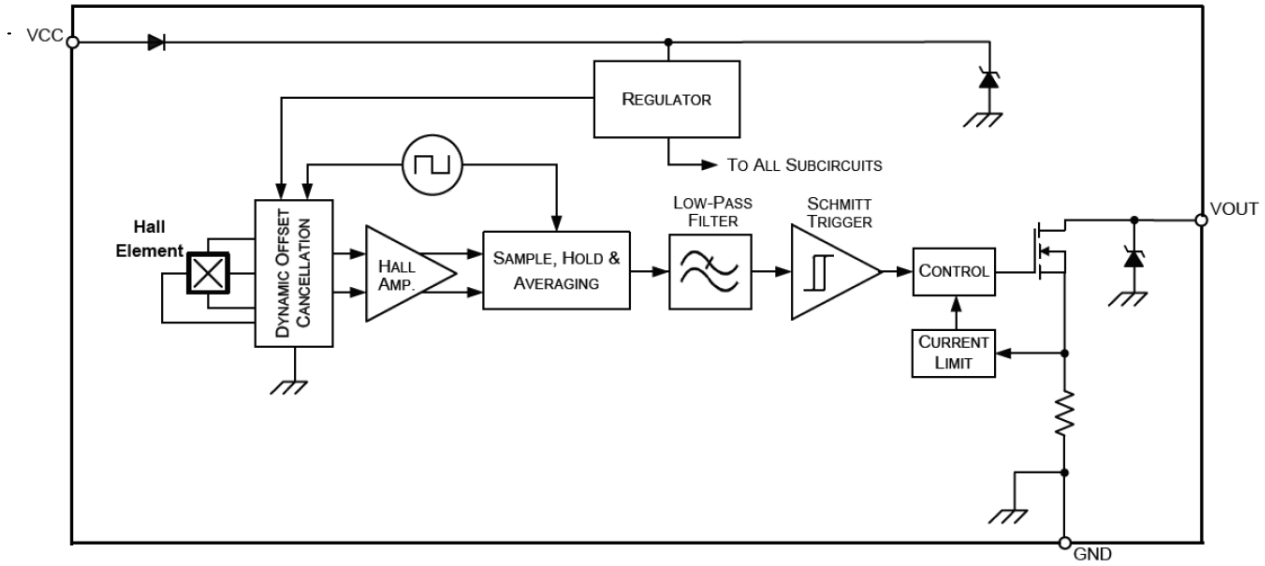

Application Circuits

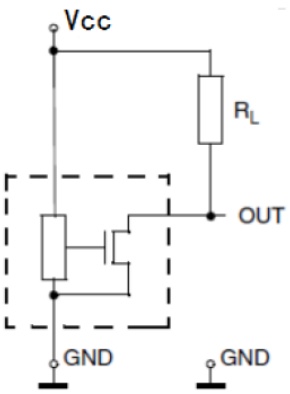

Circuit 1

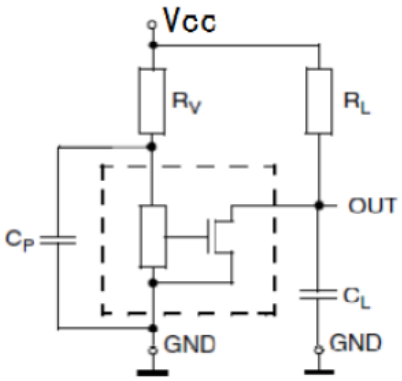

Circuit2

For applications with disturbances on the supply line or radiated disturbances, a series resistor R_V and two capacitors C_P and C_L, all placed close to the sensor, are recommended.

For example:
R_V =100Ω
C_P = 4.7 nF
C_L = 1 nF.
R_L= 1k~10k Ω

Markt Schwabener Str. 8
85464 Finsing
Germany

Tel.: +49 (0)8121-2574100
Fax: +49 (0)8121-2574101
Email: info@chenyang-gmbh.com
http://www.chenyang-gmbh.com

Application Example

A positive magnetic field is defined as a South Pole near to the marked side of the TO92S package. For the SOT23 package the positive magnetic field is defined as a North Pole near to the marked side.

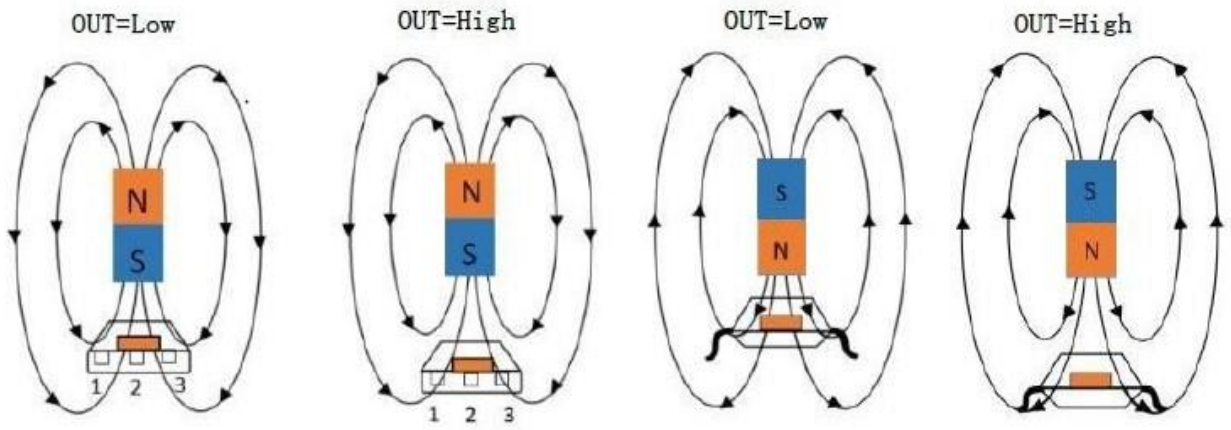

c) PO92 b) PO92 c) SOT23 d) SOT23

Output is low at a small sensing distance between magnet and sensor, for case a) and c)
Output is high at a large sensing distance between magnet and sensor, for case b) and d)

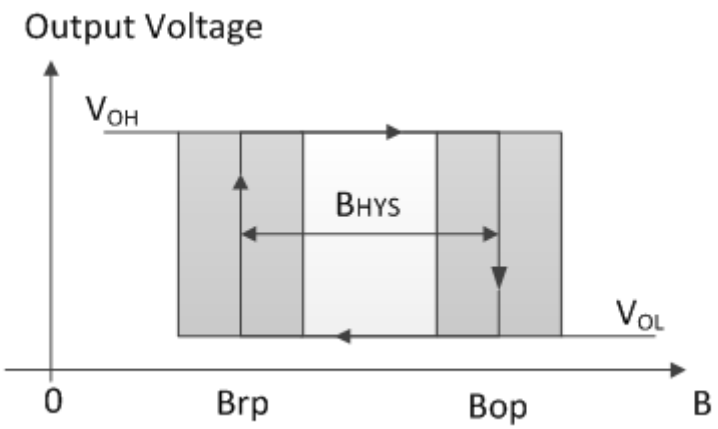

Output behavior of CYD506

ESD Test

The output pin has to be in tri-state (high impedance) for ESD measurements

Symbol	Parameter	Min	Max	Unit
V_{HBM}	Human body model (according to AEC Q100-002)	-12	12	kV

Package Outline

TO92S (UA)
(Packing: bulk, 1000pcs/bag)

Pin Assignment

Pin No.	Name	Function
1	Vcc	Power supply
2	GND	Ground
3	Vout	Output

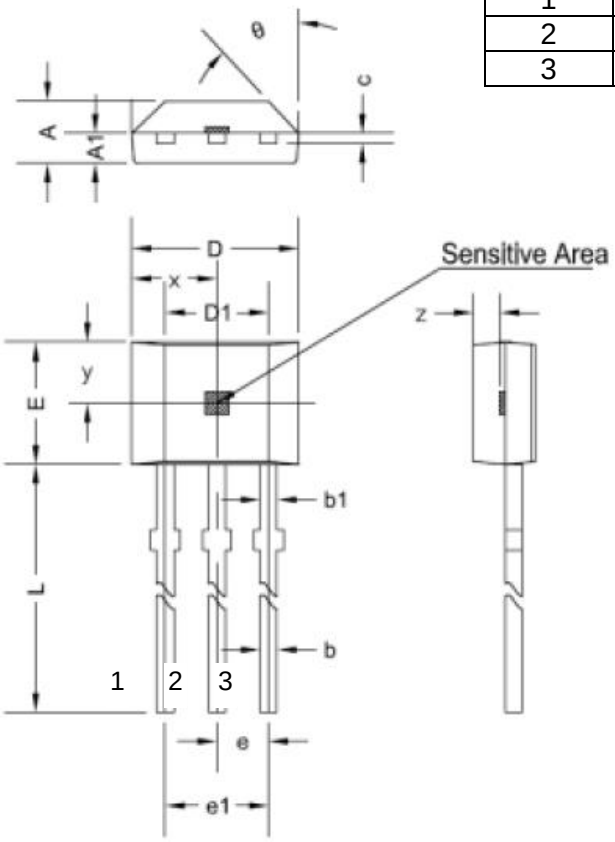

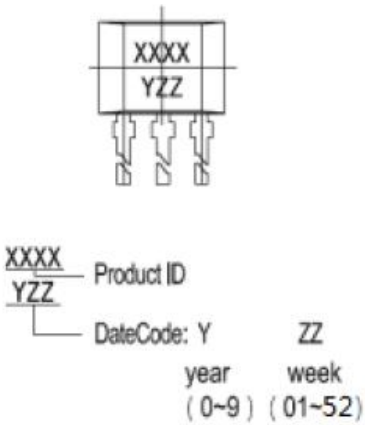

Symbol	Size (mm)		Size (in inches)	
	Min.	Max.	Min.	Max.
A	1.42	1.67	0.056	0.066
A1	0.66	0.86	0.026	0.034
b	0.35	0.56	0.014	0.022
b1	0.40	0.55	0.016	0.022
C	0.36	0.51	0.014	0.020
D	3.90	4.20	0.154	0.165
D1	2.97	3.27	0.117	0.129
E	2.90	3.28	0.114	0.129
e	1.27 typ.		0.050 tpy.	
e1	2.44	2.64	0.096	0.104
L	13.5	15.5	0.531	0.610
x	2.03 typ.		0.080 typ.	
y	1.55 typ.		0.061 typ.	
z	0.50 typ.		0.020 typ.	
θ	45° typ.		45° typ.	

Markt Schwabener Str. 8
85464 Finsing
Germany

Tel.: +49 (0)8121-2574100
Fax: +49 (0)8121-2574101
Email: info@chenyang-gmbh.com
http://www.chenyang-gmbh.com

Package Outline
SOT23-3L(LH)
(Packing: Tape&Reel, 3000pcs/reel)

Pin Assignment

Pin No.	Name	Function
1	Vcc	Power supply
2	GND	Ground
3	Vout	Output

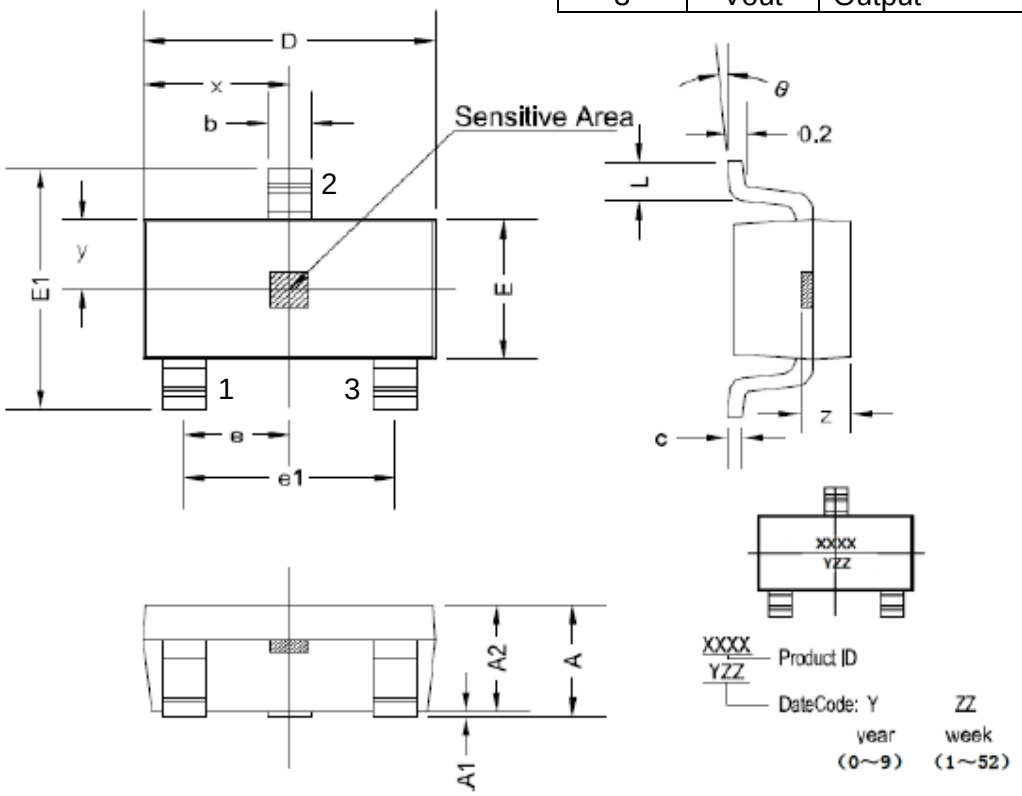

Symbol	Size (mm)		Size (in inches)	
	Min.	Max.	Min.	Max.
A	1.05	1.25	0.041	0.049
A1	0	0.10	0	0.004
A2	1.05	1.15	0.041	0.045
b	0.30	0.50	0.012	0.020
c	0.10	0.20	0.004	0.008
D	2.82	3.02	0.111	0.119
E	1.50	1.70	0.059	0.067
E1	2.65	2.95	0.104	0.116
e	0.95 typ.		0.037 tpy.	
e1	1.80	2.00	0.071	0.079
L	0.30	0.60	0.012	0.024
x	1.46 typ.		0.057 typ.	
y	0.80 typ.		0.032 typ.	
z	0.60 typ.		0.024 typ.	
θ	0°	8°	0°	8°

Markt Schwabener Str. 8
85464 Finsing
Germany

Tel.: +49 (0)8121-2574100
Fax: +49 (0)8121-2574101
Email: info@chenyang-gmbh.com
http://www.chenyang-gmbh.com

Unipolar Hall Effect Switch CYD507

Applications

- Automotive brake pedal position detection
- Proximity detection
- Speed measurement
- Weak magnetic field applications
- Solid state switches etc.

Package Type
P/N: CYD507-XX

TO92S (UA)

SOT23-3L (LH)

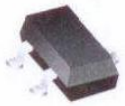

Features

- 2.7V to 30V operation voltage
- Overvoltage protection capability up to 40 V
- High accuracy unipolar switch
- Built-in dynamic offset cancellation
- Open drain output
- Low thermal drift of magnetic sensing
- Qualified according to AEC-Q100 test standard

Order Information

- CYD507-PA
  Package (PA): UA, LH

Specifications

Absolute Maximum Ratings (T_A=25°C)

Parameter	Symbol	Conditions	Rating	Unit
Maximum supply voltage	V_{DDMAX}		30	V
Operating temperature	T_A		-40~+150	°C
Storage temperature	T_S		-40~+165	°C
Maximum output current	I_{OMAX}		25	mA

Electrical Characteristics (T_A=25°C, V_{DD}=12VDC)

Characteristic	Symbol	Test Condition	Min.	Typ.	Max.	Unit
Supply voltage	V_{DD}		2.7		30	V
Supply current	I_{DD}	Output open		2.5	3.2	mA
Low output voltage	$V_{OL(ON)}$	@I_{OUT} = 20mA		130	400	mV
Output leakage current	I_{OH}	Output switch off			0.1	µA
Output voltage	V_{OUT}				30	V
Output voltage fall time	t_f	V_{DD}=12V; R_L=820Ω; C_L=20pF			1	µs
Output voltage rise time	t_r				1	µs
Delay time	t_d			18		µs

Magnetic Characteristics (T_A=25°C, V_{DD}=12VDC)

Characteristic	Symbol	Test Condition	Min.	Typ.	Max.	Unit
Operating point (On point)	B_{OP}	Pullup resistor R_L=1kΩ, Load capacitor C_L=20pF		27		mT
Release point (Off point)	B_{RP}			23		mT
Hysteresis	B_{HYS}			4		mT
Temperature coefficient	Tc			-300		ppm/°C

Markt Schwabener Str. 8
85464 Finsing
Germany

Tel.: +49 (0)8121-2574100
Fax: +49 (0)8121-2574101
Email: info@chenyang-gmbh.com
http://www.chenyang-gmbh.com

General Specifications

CYD507 Hall Effect Switch is a monolithic integrated circuit which switches in response to magnetic field. If a magnetic field with flux lines perpendicular to the sensitive area is applied to the sensor, the biased Hall plate forces a Hall voltage proportional to this field. The Hall voltage is compared with the actual threshold level in the comparator. If the magnetic field exceeds the threshold levels, the output stage is switched to the appropriate state. The built-in hysteresis eliminates oscillation and provides switching behavior of output without bouncing.

Magnetic offset caused by mechanical stress is compensated by using the chopping offset compensation technique. A serial resistor or diode on the supply line is not required thanks to the built-in reverse voltage protection.

The open drain output is forced to a safe, high-impedance state (tri-state), in any of the following fault conditions: overtemperature, and undervoltage. In addition, the output current is limited (short-circuit protection).
The device is able to withstand a maximum supply voltage of 28 V for unlimited time and features overvoltage capability (40V load dump). The architecture block diagram is shown in the following Fig.

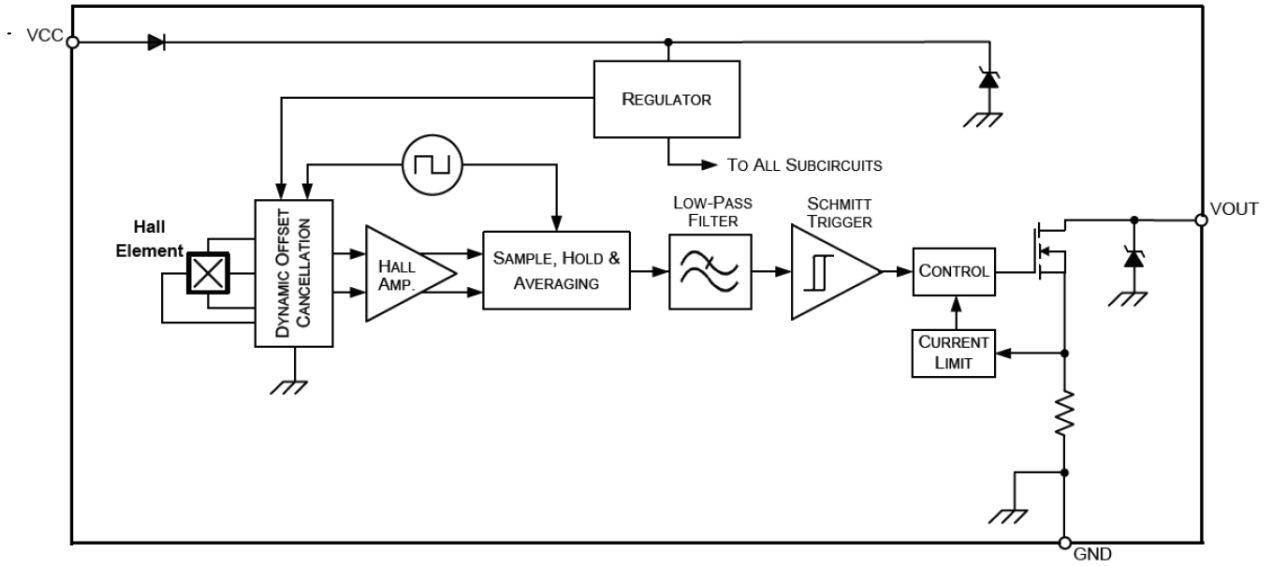

Application Circuits

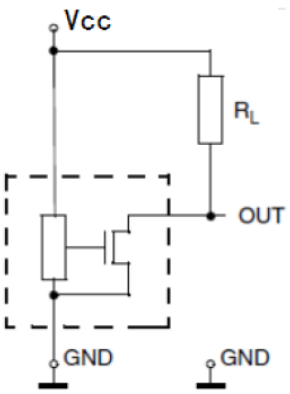

Circuit 1

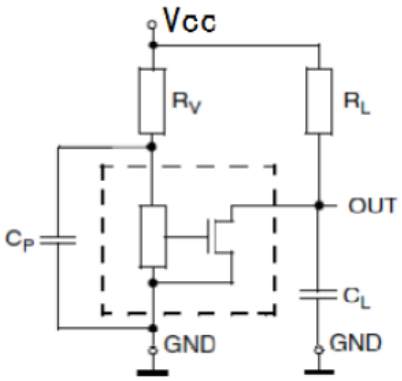

Circuit 2

For applications with disturbances on the supply line or radiated disturbances, a series resistor R_V and two capacitors C_P and C_L, all placed close to the sensor, are recommended.

For example:
R_V =100Ω
C_P = 4.7 nF
C_L = 1 nF.
R_L= 1k~10k Ω

Markt Schwabener Str. 8
85464 Finsing
Germany

Tel.: +49 (0)8121-2574100
Fax: +49 (0)8121-2574101
Email: info@chenyang-gmbh.com
http://www.chenyang-gmbh.com

Application Example

A positive magnetic field is defined as a South Pole near to the marked side of the TO92S package. For the SOT23 package the positive magnetic field is defined as a North Pole near to the marked side.

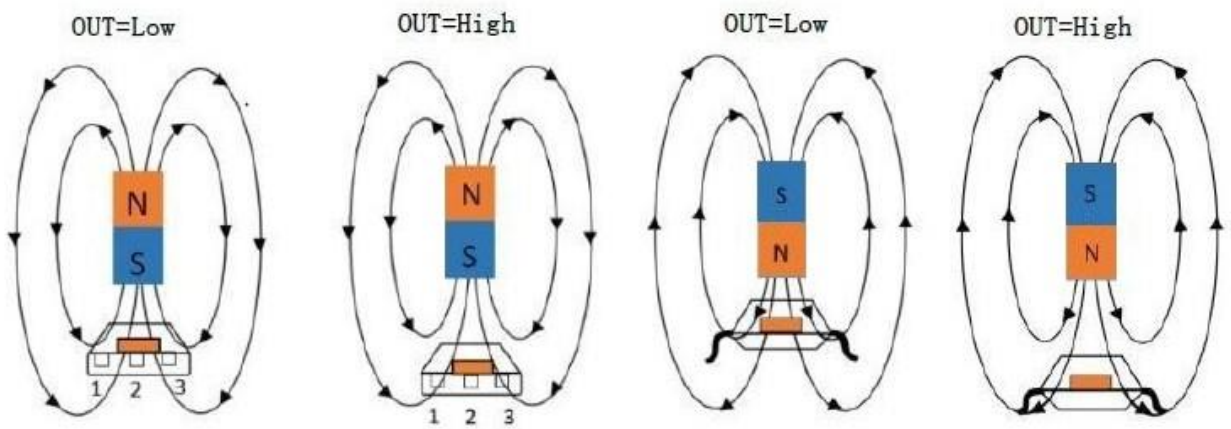

d) PO92 b) PO92 c) SOT23 d) SOT23

Output is low at a small sensing distance between magnet and sensor, for case a) and c)
Output is high at a large sensing distance between magnet and sensor, for case b) and d)

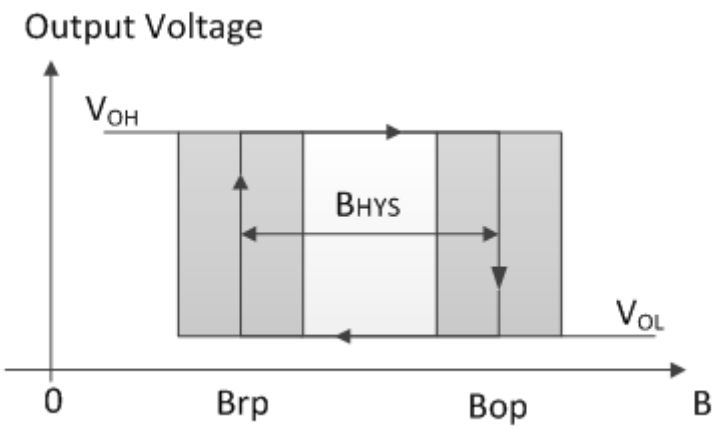

Output behavior of CYD507

ESD Test

The output pin has to be in tri-state (high impedance) for ESD measurements

Symbol	Parameter	Min	Max	Unit
V_{HBM}	Human body model (according to AEC Q100-002)	-12	12	kV

Package Outline

TO92S (UA)
(Packing: bulk, 1000pcs/bag)

Pin Assignment

Pin No.	Name	Function
1	Vcc	Power supply
2	GND	Ground
3	Vout	Output

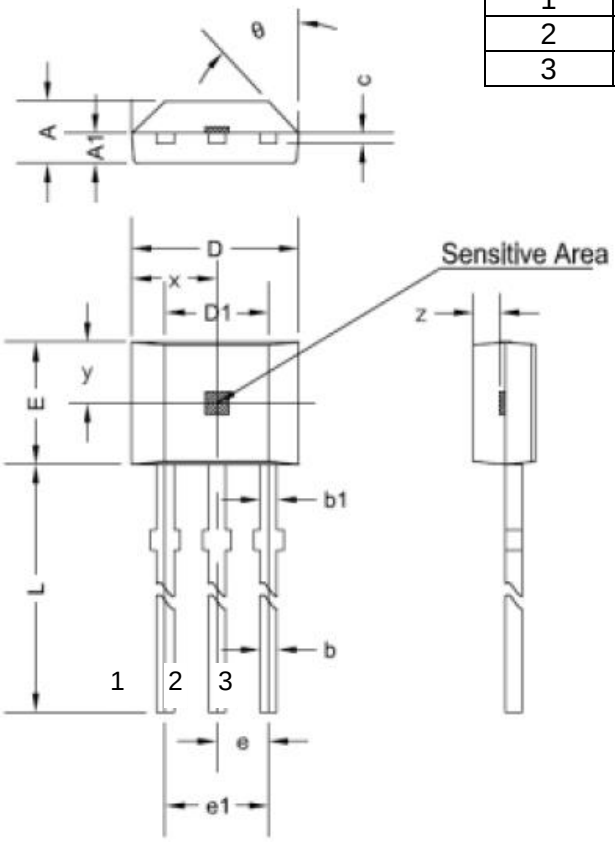

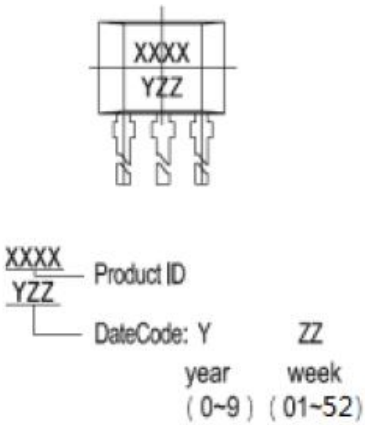

Symbol	Size (mm)		Size (in inches)	
	Min.	Max.	Min.	Max.
A	1.42	1.67	0.056	0.066
A1	0.66	0.86	0.026	0.034
b	0.35	0.56	0.014	0.022
b1	0.40	0.55	0.016	0.022
C	0.36	0.51	0.014	0.020
D	3.90	4.20	0.154	0.165
D1	2.97	3.27	0.117	0.129
E	2.90	3.28	0.114	0.129
e	1.27 typ.		0.050 tpy.	
e1	2.44	2.64	0.096	0.104
L	13.5	15.5	0.531	0.610
x	2.03 typ.		0.080 typ.	
y	1.55 typ.		0.061 typ.	
z	0.50 typ.		0.020 typ.	
θ	45° typ.		45° typ.	

Markt Schwabener Str. 8
85464 Finsing
Germany

Tel.: +49 (0)8121-2574100
Fax: +49 (0)8121-2574101
Email: info@chenyang-gmbh.com
http://www.chenyang-gmbh.com

Package Outline

SOT23-3L(LH)
(Packing: Tape&Reel, 3000pcs/reel)

Pin Assignment

Pin No.	Name	Function
1	Vcc	Power supply
2	GND	Ground
3	Vout	Output

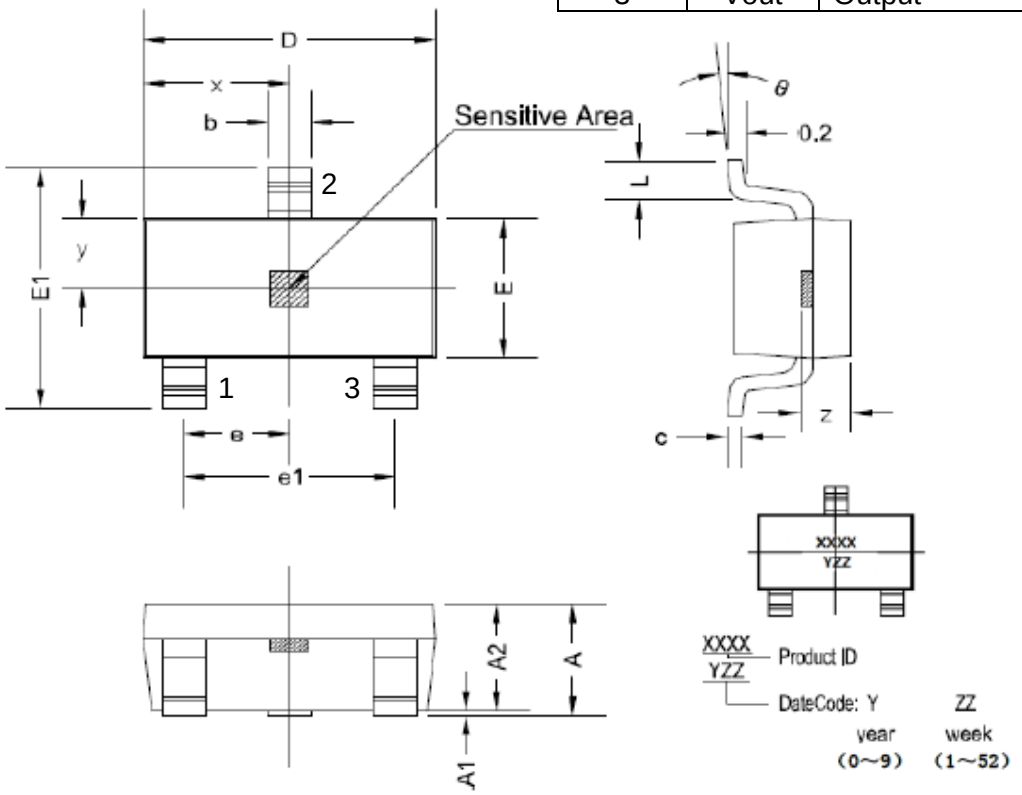

Symbol	Size (mm)		Size (in inches)	
	Min.	Max.	Min.	Max.
A	1.05	1.25	0.041	0.049
A1	0	0.10	0	0.004
A2	1.05	1.15	0.041	0.045
b	0.30	0.50	0.012	0.020
c	0.10	0.20	0.004	0.008
D	2.82	3.02	0.111	0.119
E	1.50	1.70	0.059	0.067
E1	2.65	2.95	0.104	0.116
e	0.95 typ.		0.037 tpy.	
e1	1.80	2.00	0.071	0.079
L	0.30	0.60	0.012	0.024
x	1.46 typ.		0.057 typ.	
y	0.80 typ.		0.032 typ.	
z	0.60 typ.		0.024 typ.	
θ	0°	8°	0°	8°

Markt Schwabener Str. 8
85464 Finsing
Germany

Tel.: +49 (0)8121-2574100
Fax: +49 (0)8121-2574101
Email: info@chenyang-gmbh.com
http://www.chenyang-gmbh.com

High-Sensitive Unipolar Hall Effect Switch CYD508

Applications

- Automotive brake pedal position detection
- Proximity detection
- Speed measurement
- Weak magnetic field applications
- Solid state switches etc.

Package Type
P/N: CYD508-XX

TO92S (UA)

SOT23-3L (LH)

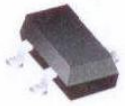

Features

- 2.7V to 30V operation voltage
- Overvoltage protection capability up to 40 V
- High accuracy unipolar switch
- Built-in dynamic offset cancellation
- Open drain output
- Low thermal drift of magnetic sensing
- Qualified according to AEC-Q100 test standard

Order Information

- CYD508-PA
  Package (PA): UA, LH

Specifications

Absolute Maximum Ratings (T_A=25°C)

Parameter	Symbol	Conditions	Rating	Unit
Maximum supply voltage	V_{DDMAX}		30	V
Operating temperature	T_A		-40~+150	°C
Storage temperature	T_S		-40~+165	°C
Maximum output current	I_{OMAX}		25	mA

Electrical Characteristics (T_A=25°C, V_{DD}=12VDC)

Characteristic	Symbol	Test Condition	Min.	Typ.	Max.	Unit
Supply voltage	V_{DD}		2.7		30	V
Supply current	I_{DD}	Output open		2.5	3.2	mA
Low output voltage	$V_{OL(ON)}$	@I_{OUT} = 20mA		130	400	mV
Output leakage current	I_{OH}	Output switch off			0.1	µA
Output voltage	V_{OUT}				30	V
Output voltage fall time	t_f	V_{DD}=12V; R_L=820Ω; C_L=20pF			1	µs
Output voltage rise time	t_r				1	µs
Delay time	t_d			18		µs

Magnetic Characteristics (T_A=25°C, V_{DD}=12VDC)

Characteristic	Symbol	Test Condition	Min.	Typ.	Max.	Unit
Operating point (On point)	B_{OP}	Pullup resistor R_L=1kΩ, Load capacitor C_L=20pF		-5.5		mT
Release point (Off point)	B_{RP}			-3.5		mT
Hysteresis	B_{HYS}			2.0		mT
Temperature coefficient	Tc			-1000		ppm/°C

Markt Schwabener Str. 8
85464 Finsing
Germany

Tel.: +49 (0)8121-2574100
Fax: +49 (0)8121-2574101
Email: info@chenyang-gmbh.com
http://www.chenyang-gmbh.com

General Specifications

CYD508 Hall Effect Switch is a monolithic integrated circuit which switches in response to magnetic field. If a magnetic field with flux lines perpendicular to the sensitive area is applied to the sensor, the biased Hall plate forces a Hall voltage proportional to this field. The Hall voltage is compared with the actual threshold level in the comparator. If the magnetic field exceeds the threshold levels, the output stage is switched to the appropriate state. The built-in hysteresis eliminates oscillation and provides switching behavior of output without bouncing.

Magnetic offset caused by mechanical stress is compensated by using the chopping offset compensation technique. A serial resistor or diode on the supply line is not required thanks to the built-in reverse voltage protection.

The open drain output is forced to a safe, high-impedance state (tri-state), in any of the following fault conditions: overtemperature, and undervoltage. In addition, the output current is limited (short-circuit protection).
The device is able to withstand a maximum supply voltage of 28 V for unlimited time and features overvoltage capability (40V load dump). The architecture block diagram is shown in the following Fig.

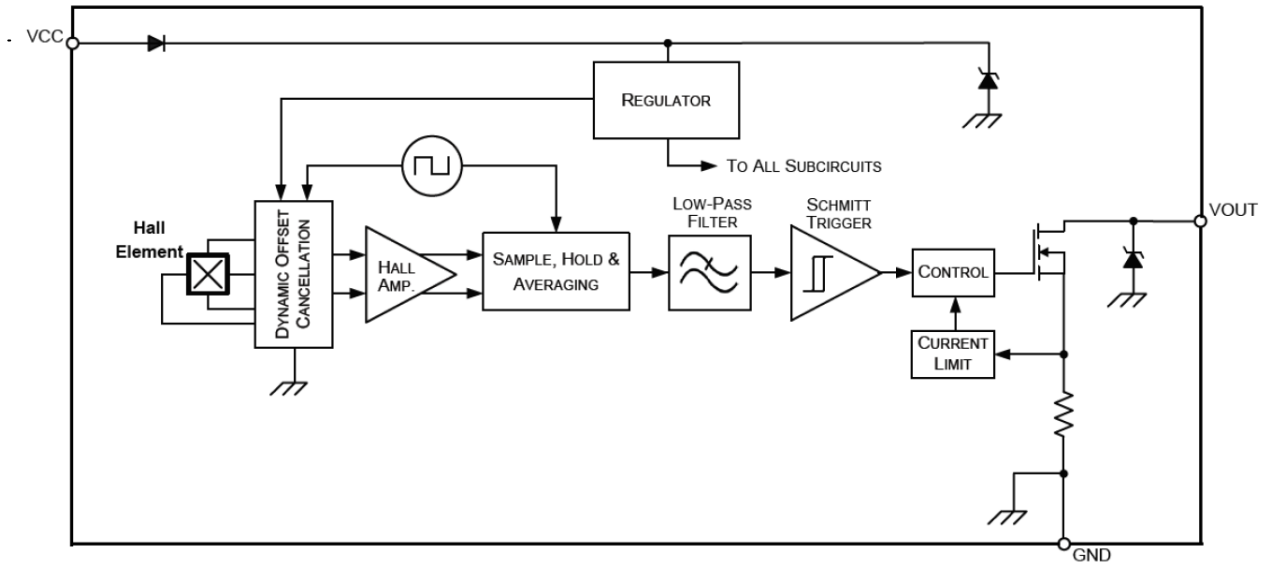

Application Circuits

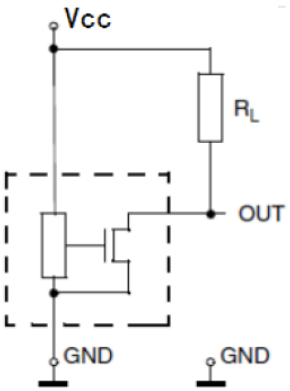

Circuit 1

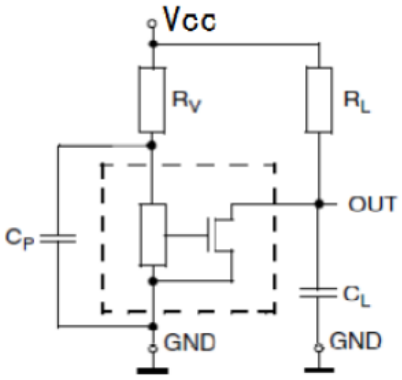

Circuit 2

For applications with disturbances on the supply line or radiated disturbances, a series resistor R_V and two capacitors C_P and C_L, all placed close to the sensor, are recommended.

For example:
R_V =100Ω
C_P = 4.7 nF
C_L = 1 nF.
R_L= 1k~10k Ω

Markt Schwabener Str. 8
85464 Finsing
Germany

Tel.: +49 (0)8121-2574100
Fax: +49 (0)8121-2574101
Email: info@chenyang-gmbh.com
http://www.chenyang-gmbh.com

Application Example

A positive magnetic field is defined as a South Pole near to the marked side of the TO92S package. For the SOT23 package the positive magnetic field is defined as a North Pole near to the marked side.

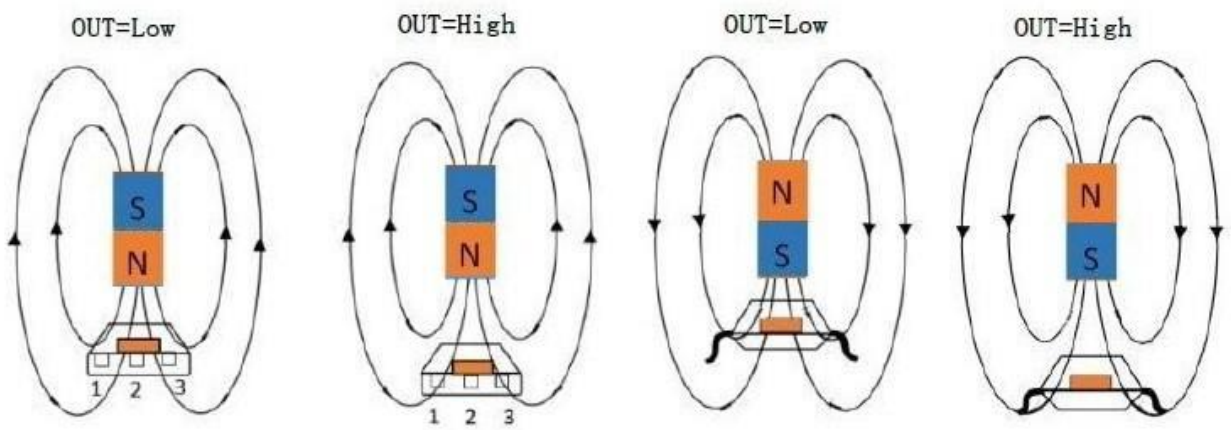

e) PO92 b) PO92 c) SOT23 d) SOT23

Output is low at a small sensing distance between magnet and sensor, for case a) and c)
Output is high at a large sensing distance between magnet and sensor, for case b) and d)

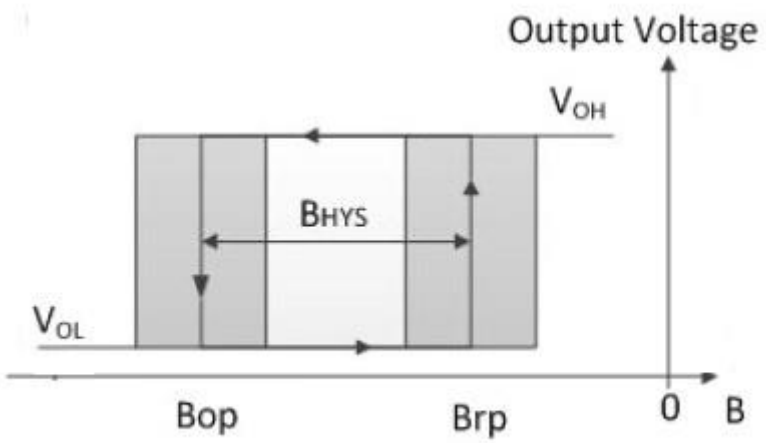

Output behavior of CYD508

ESD Test

The output pin has to be in tri-state (high impedance) for ESD measurements

Symbol	Parameter	Min	Max	Unit
V_{HBM}	Human body model (according to AEC Q100-002)	-12	12	kV

Package Outline

TO92S (UA)
(Packing: bulk, 1000pcs/bag)

Pin Assignment

Pin No.	Name	Function
1	Vcc	Power supply
2	GND	Ground
3	Vout	Output

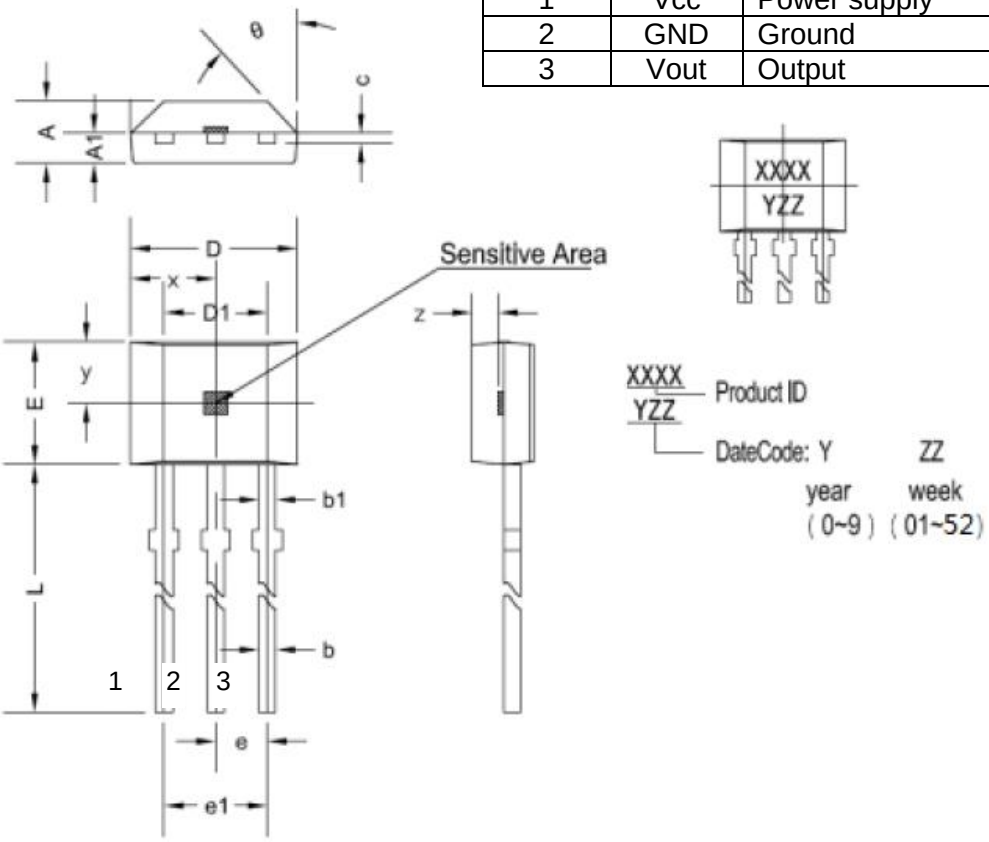

Symbol	Size (mm)		Size (in inches)	
	Min.	Max.	Min.	Max.
A	1.42	1.67	0.056	0.066
A1	0.66	0.86	0.026	0.034
b	0.35	0.56	0.014	0.022
b1	0.40	0.55	0.016	0.022
C	0.36	0.51	0.014	0.020
D	3.90	4.20	0.154	0.165
D1	2.97	3.27	0.117	0.129
E	2.90	3.28	0.114	0.129
e	1.27 typ.		0.050 tpy.	
e1	2.44	2.64	0.096	0.104
L	13.5	15.5	0.531	0.610
x	2.03 typ.		0.080 typ.	
y	1.55 typ.		0.061 typ.	
z	0.50 typ.		0.020 typ.	
θ	45° typ.		45° typ.	

Markt Schwabener Str. 8
85464 Finsing
Germany

Tel.: +49 (0)8121-2574100
Fax: +49 (0)8121-2574101
Email: info@chenyang-gmbh.com
http://www.chenyang-gmbh.com

Package Outline
SOT23-3L(LH)
(Packing: Tape&Reel, 3000pcs/reel)

Pin Assignment

Pin No.	Name	Function
1	Vcc	Power supply
2	GND	Ground
3	Vout	Output

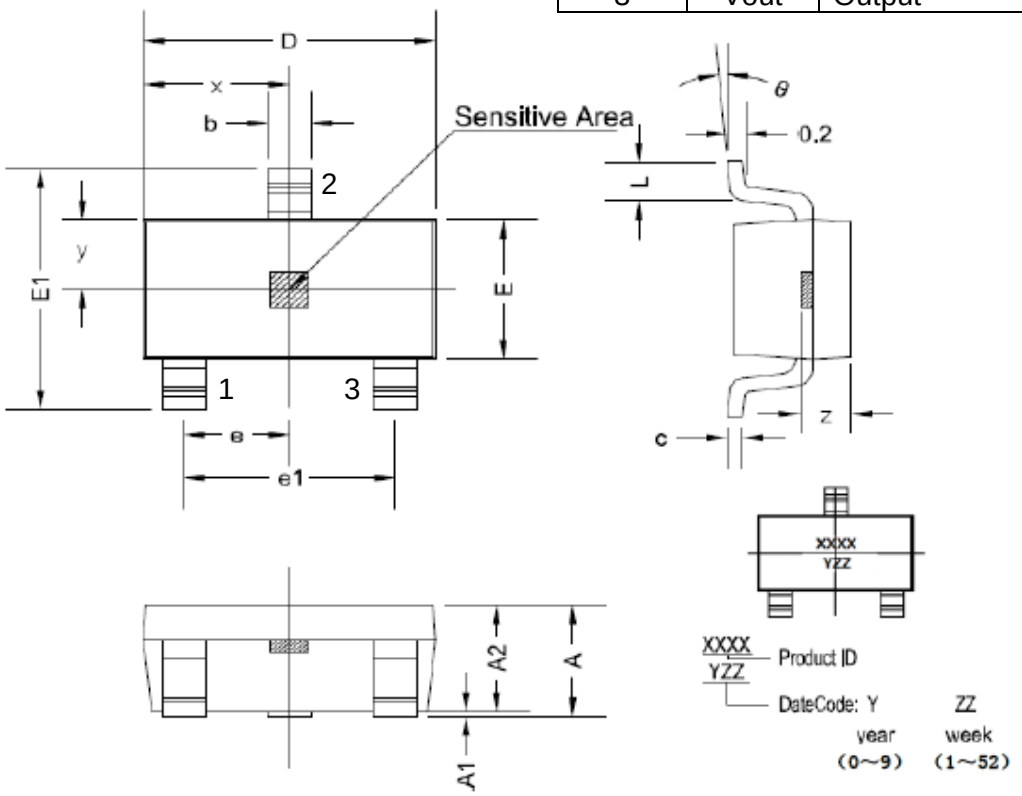

Symbol	Size (mm)		Size (in inches)	
	Min.	Max.	Min.	Max.
A	1.05	1.25	0.041	0.049
A1	0	0.10	0	0.004
A2	1.05	1.15	0.041	0.045
b	0.30	0.50	0.012	0.020
c	0.10	0.20	0.004	0.008
D	2.82	3.02	0.111	0.119
E	1.50	1.70	0.059	0.067
E1	2.65	2.95	0.104	0.116
e	0.95 typ.		0.037 tpy.	
e1	1.80	2.00	0.071	0.079
L	0.30	0.60	0.012	0.024
x	1.46 typ.		0.057 typ.	
y	0.80 typ.		0.032 typ.	
z	0.60 typ.		0.024 typ.	
θ	0°	8°	0°	8°

Markt Schwabener Str. 8
85464 Finsing
Germany

Tel.: +49 (0)8121-2574100
Fax: +49 (0)8121-2574101
Email: info@chenyang-gmbh.com
http://www.chenyang-gmbh.com

High-Sensitive Unipolar Hall Effect Switch CYD509

Applications

- Automotive brake pedal position detection
- Proximity detection
- Speed measurement
- Weak magnetic field applications
- Solid state switches etc.

Package Type
P/N: CYD509-XX

TO92S (UA)

SOT23-3L (LH)

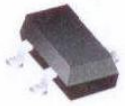

Features

- 2.7V to 30V operation voltage
- Overvoltage protection capability up to 40 V
- High accuracy unipolar switch
- Built-in dynamic offset cancellation
- Open drain output
- Low thermal drift of magnetic sensing
- Qualified according to AEC-Q100 test standard

Order Information

- CYD509-PA
  Package (PA): UA, LH

Specifications

Absolute Maximum Ratings (T_A=25°C)

Parameter	Symbol	Conditions	Rating	Unit
Maximum supply voltage	V_{DDMAX}		30	V
Operating temperature	T_A		-40~+150	°C
Storage temperature	T_S		-40~+165	°C
Maximum output current	I_{OMAX}		25	mA

Electrical Characteristics (T_A=25°C, V_{DD}=12VDC)

Characteristic	Symbol	Test Condition	Min.	Typ.	Max.	Unit
Supply voltage	V_{DD}		2.7		30	V
Supply current	I_{DD}	Output open		2.5	3.2	mA
Low output voltage	$V_{OL(ON)}$	@I_{OUT} = 20mA		130	400	mV
Output leakage current	I_{OH}	Output switch off			0.1	µA
Output voltage	V_{OUT}				30	V
Output voltage fall time	t_f	V_{DD}=12V; R_L=820Ω; C_L=20pF			1	µs
Output voltage rise time	t_r				1	µs
Delay time	t_d			18		µs

Magnetic Characteristics (T_A=25°C, V_{DD}=12VDC)

Characteristic	Symbol	Test Condition	Min.	Typ.	Max.	Unit
Operating point (On point)	B_{OP}	Pullup resistor R_L=1kΩ, Load capacitor C_L=20pF	20	35	50	G
Release point (Off point)	B_{RP}		38	55	72	G
Hysteresis	B_{HYS}		15	20	27	G
Temperature coefficient	Tc			-1000		ppm/°C

Markt Schwabener Str. 8
85464 Finsing
Germany

Tel.: +49 (0)8121-2574100
Fax: +49 (0)8121-2574101
Email: info@chenyang-gmbh.com
http://www.chenyang-gmbh.com

General Specifications

CYD509 Hall Effect Switch is a monolithic integrated circuit which switches in response to magnetic field. If a magnetic field with flux lines perpendicular to the sensitive area is applied to the sensor, the biased Hall plate forces a Hall voltage proportional to this field. The Hall voltage is compared with the actual threshold level in the comparator. If the magnetic field exceeds the threshold levels, the output stage is switched to the appropriate state. The built-in hysteresis eliminates oscillation and provides switching behavior of output without bouncing.

Magnetic offset caused by mechanical stress is compensated by using the chopping offset compensation technique. A serial resistor or diode on the supply line is not required thanks to the built-in reverse voltage protection.

The open drain output is forced to a safe, high-impedance state (tri-state), in any of the following fault conditions: overtemperature, and undervoltage. In addition, the output current is limited (short-circuit protection).
The device is able to withstand a maximum supply voltage of 28 V for unlimited time and features overvoltage capability (40V load dump). The architecture block diagram is shown in the following Fig.

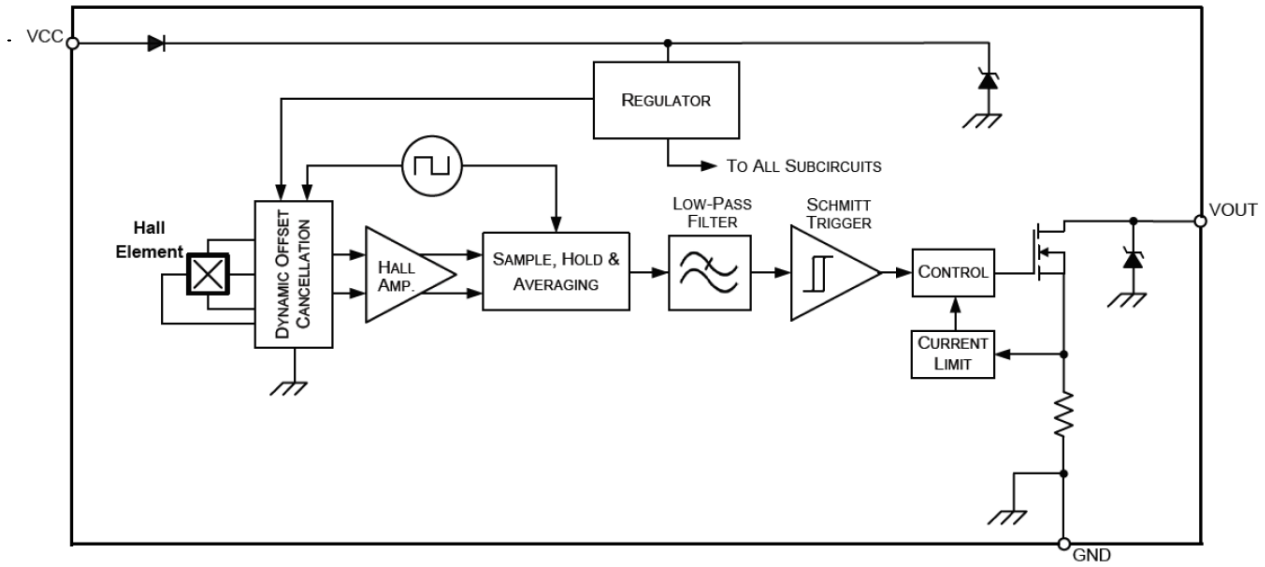

Application Circuits

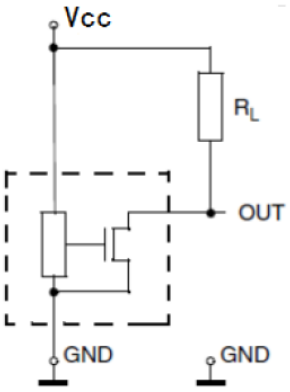

Circuit 1

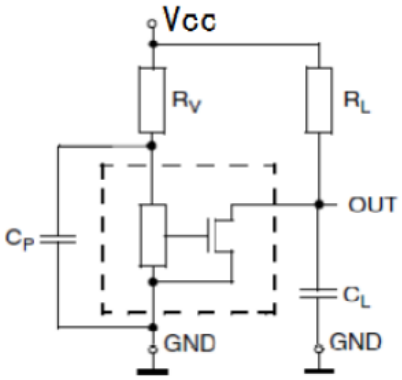

Circuit 2

For applications with disturbances on the supply line or radiated disturbances, a series resistor R_V and two capacitors C_P and C_L, all placed close to the sensor, are recommended.

For example:
R_V =100Ω
C_P = 4.7 nF
C_L = 1 nF.
R_L= 1k~10k Ω

Markt Schwabener Str. 8
85464 Finsing
Germany

Tel.: +49 (0)8121-2574100
Fax: +49 (0)8121-2574101
Email: info@chenyang-gmbh.com
http://www.chenyang-gmbh.com

Application Example

A positive magnetic field is defined as a South Pole near to the marked side of the TO92S package. For the SOT23 package the positive magnetic field is defined as a North Pole near to the marked side.

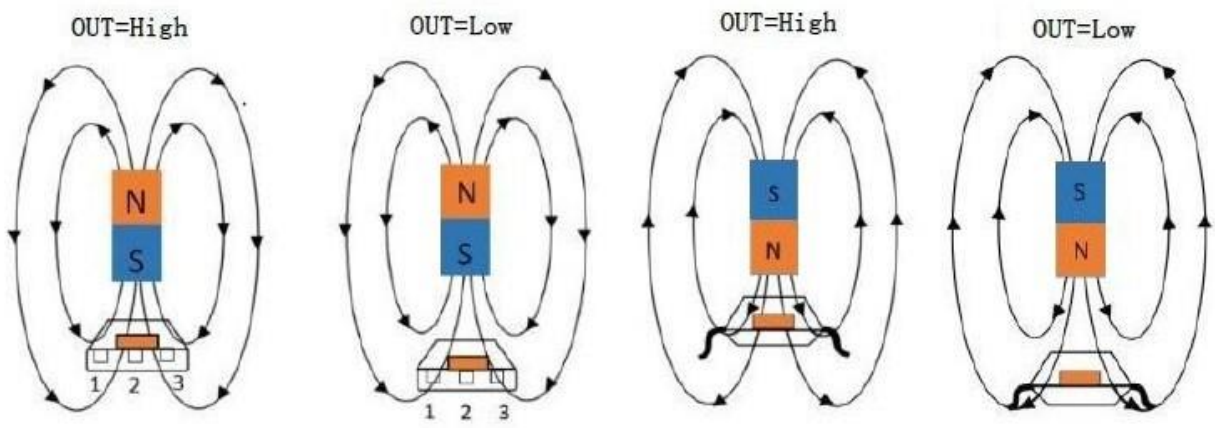

f) PO92 b) PO92 c) SOT23 d) SOT23

Output is low at a small sensing distance between magnet and sensor, for case a) and c)
Output is high at a large sensing distance between magnet and sensor, for case b) and d)

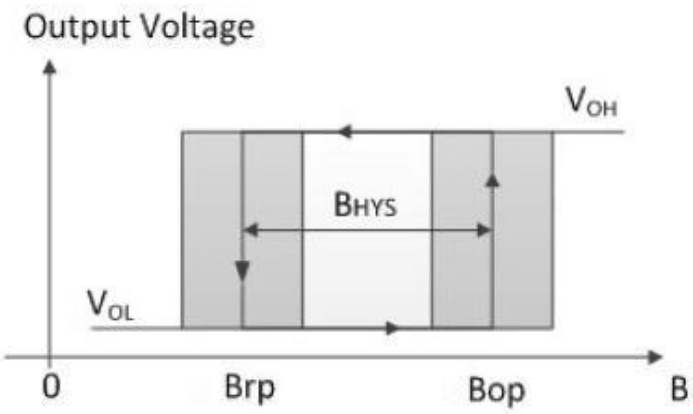

Output behavior of CYD509

ESD Test

The output pin has to be in tri-state (high impedance) for ESD measurements

Symbol	Parameter	Min	Max	Unit
V_{HBM}	Human body model (according to AEC Q100-002)	-12	12	kV

Package Outline
TO92S (UA)
(Packing: bulk, 1000pcs/bag)

Pin Assignment

Pin No.	Name	Function
1	Vcc	Power supply
2	GND	Ground
3	Vout	Output

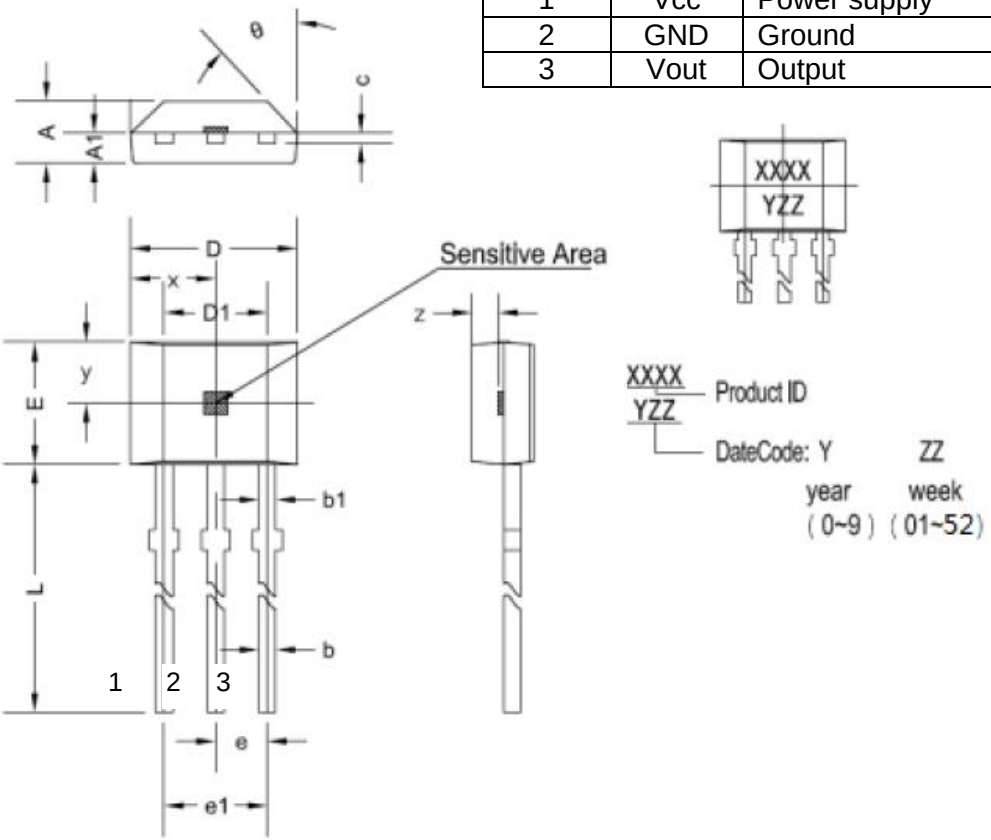

Symbol	Size (mm)		Size (in inches)	
	Min.	Max.	Min.	Max.
A	1.42	1.67	0.056	0.066
A1	0.66	0.86	0.026	0.034
b	0.35	0.56	0.014	0.022
b1	0.40	0.55	0.016	0.022
C	0.36	0.51	0.014	0.020
D	3.90	4.20	0.154	0.165
D1	2.97	3.27	0.117	0.129
E	2.90	3.28	0.114	0.129
e	1.27 typ.		0.050 tpy.	
e1	2.44	2.64	0.096	0.104
L	13.5	15.5	0.531	0.610
x	2.03 typ.		0.080 typ.	
y	1.55 typ.		0.061 typ.	
z	0.50 typ.		0.020 typ.	
θ	45° typ.		45° typ.	

Markt Schwabener Str. 8
85464 Finsing
Germany

Tel.: +49 (0)8121-2574100
Fax: +49 (0)8121-2574101
Email: info@chenyang-gmbh.com
http://www.chenyang-gmbh.com

Package Outline
SOT23-3L(LH)
(Packing: Tape&Reel, 3000pcs/reel)

Pin Assignment

Pin No.	Name	Function
1	Vcc	Power supply
2	GND	Ground
3	Vout	Output

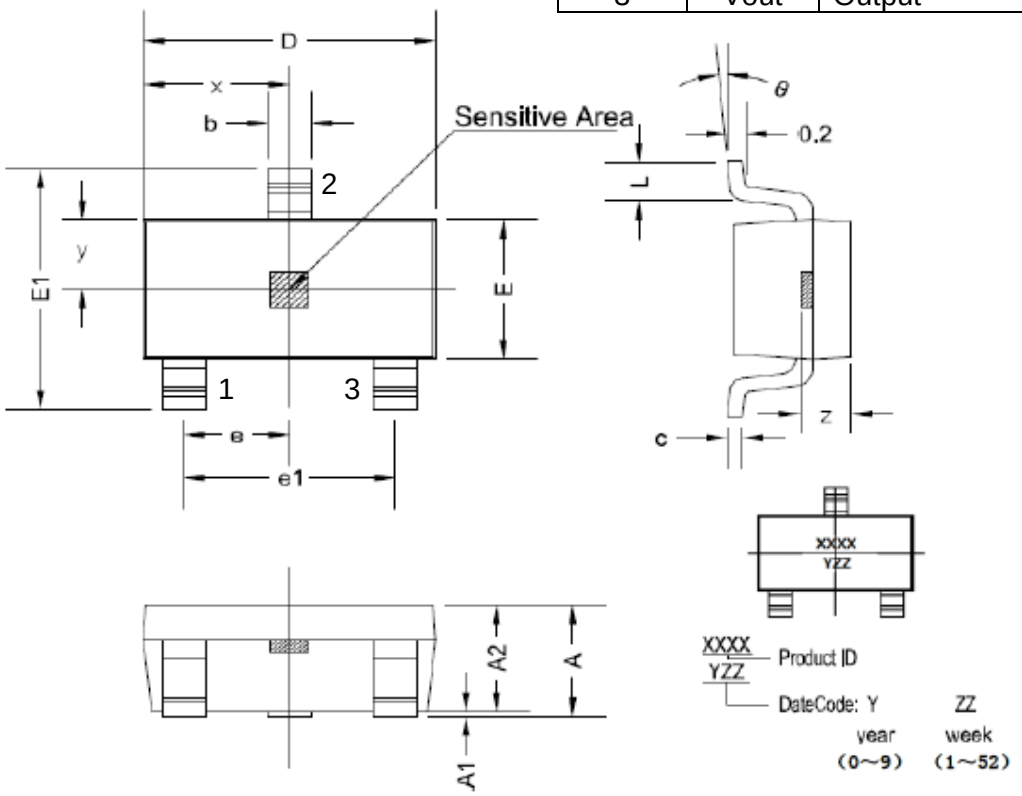

Symbol	Size (mm)		Size (in inches)	
	Min.	Max.	Min.	Max.
A	1.05	1.25	0.041	0.049
A1	0	0.10	0	0.004
A2	1.05	1.15	0.041	0.045
b	0.30	0.50	0.012	0.020
c	0.10	0.20	0.004	0.008
D	2.82	3.02	0.111	0.119
E	1.50	1.70	0.059	0.067
E1	2.65	2.95	0.104	0.116
e	0.95 typ.		0.037 tpy.	
e1	1.80	2.00	0.071	0.079
L	0.30	0.60	0.012	0.024
x	1.46 typ.		0.057 typ.	
y	0.80 typ.		0.032 typ.	
z	0.60 typ.		0.024 typ.	
θ	0°	8°	0°	8°

Markt Schwabener Str. 8
85464 Finsing
Germany

Tel.: +49 (0)8121-2574100
Fax: +49 (0)8121-2574101
Email: info@chenyang-gmbh.com
http://www.chenyang-gmbh.com

Unipolar Hall Effect Switch CYD510

Applications

- Automotive brake pedal position detection
- Proximity detection
- Speed measurement
- Weak magnetic field applications
- Solid state switches etc.

Package Type
P/N: CYD510-XX

TO92S (UA)

SOT23-3L (LH)

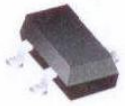

Features

- 2.7V to 30V operation voltage
- Overvoltage protection capability up to 40 V
- High accuracy unipolar switch
- Built-in dynamic offset cancellation
- Open drain output
- Low thermal drift of magnetic sensing
- Qualified according to AEC-Q100 test standard

Order Information

- CYD510-PA
  Package (PA): UA, LH

Specifications

Absolute Maximum Ratings (T_A=25°C)

Parameter	Symbol	Conditions	Rating	Unit
Maximum supply voltage	V_{DDMAX}		30	V
Operating temperature	T_A		-40~+150	°C
Storage temperature	T_S		-40~+165	°C
Maximum output current	I_{OMAX}		25	mA

Electrical Characteristics (T_A=25°C, V_{DD}=12VDC)

Characteristic	Symbol	Test Condition	Min.	Typ.	Max.	Unit
Supply voltage	V_{DD}		2.7		30	V
Supply current	I_{DD}	Output open		2.5	3.2	mA
Low output voltage	$V_{OL(ON)}$	@I_{OUT} = 20mA		130	400	mV
Output leakage current	I_{OH}	Output switch off			0.1	µA
Output voltage	V_{OUT}				30	V
Output voltage fall time	t_f	V_{DD}=12V; R_L=820Ω; C_L=20pF			1	µs
Output voltage rise time	t_r				1	µs
Delay time	t_d			18		µs

Magnetic Characteristics (T_A=25°C, V_{DD}=12VDC)

Characteristic	Symbol	Test Condition	Min.	Typ.	Max.	Unit
Operating point (On point)	B_{OP}	Pullup resistor R_L=1kΩ, Load capacitor C_L=20pF		10		mT
Release point (Off point)	B_{RP}			8		mT
Hysteresis	B_{HYS}			2		mT
Temperature coefficient	Tc			-1000		ppm/°C

Markt Schwabener Str. 8
85464 Finsing
Germany

Tel.: +49 (0)8121-2574100
Fax: +49 (0)8121-2574101
Email: info@chenyang-gmbh.com
http://www.chenyang-gmbh.com

General Specifications

CYD510 Hall Effect Switch is a monolithic integrated circuit which switches in response to magnetic field. If a magnetic field with flux lines perpendicular to the sensitive area is applied to the sensor, the biased Hall plate forces a Hall voltage proportional to this field. The Hall voltage is compared with the actual threshold level in the comparator. If the magnetic field exceeds the threshold levels, the output stage is switched to the appropriate state. The built-in hysteresis eliminates oscillation and provides switching behavior of output without bouncing.

Magnetic offset caused by mechanical stress is compensated by using the chopping offset compensation technique. A serial resistor or diode on the supply line is not required thanks to the built-in reverse voltage protection.

The open drain output is forced to a safe, high-impedance state (tri-state), in any of the following fault conditions: overtemperature, and undervoltage. In addition, the output current is limited (short-circuit protection).
The device is able to withstand a maximum supply voltage of 28 V for unlimited time and features overvoltage capability (40V load dump). The architecture block diagram is shown in the following Fig.

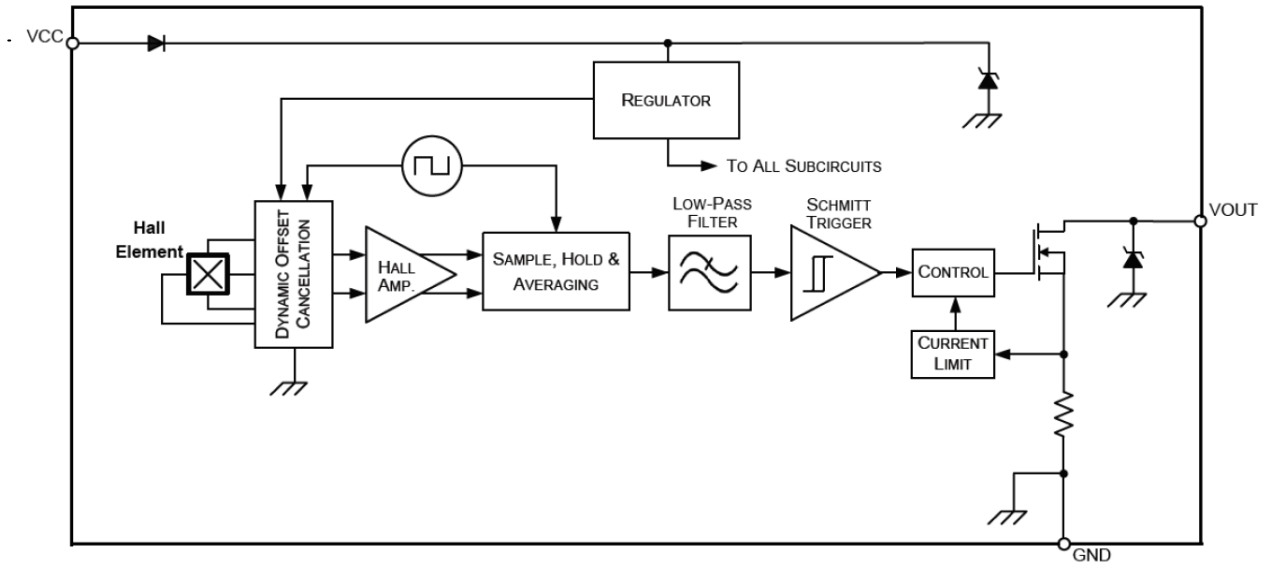

Application Circuits

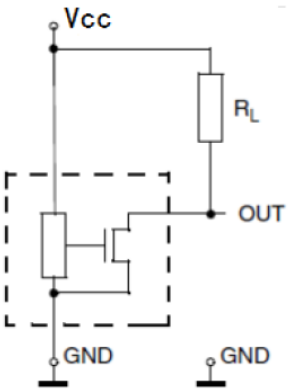

Circuit 1

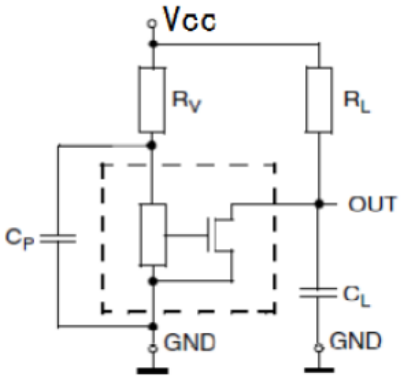

Circuit 2

For applications with disturbances on the supply line or radiated disturbances, a series resistor R_V and two capacitors C_P and C_L, all placed close to the sensor, are recommended.

For example:
R_V =100Ω
C_P = 4.7 nF
C_L = 1 nF.
R_L= 1k~10k Ω

Markt Schwabener Str. 8
85464 Finsing
Germany

Tel.: +49 (0)8121-2574100
Fax: +49 (0)8121-2574101
Email: info@chenyang-gmbh.com
http://www.chenyang-gmbh.com

Application Example

A positive magnetic field is defined as a South Pole near to the marked side of the TO92S package. For the SOT23 package the positive magnetic field is defined as a North Pole near to the marked side.

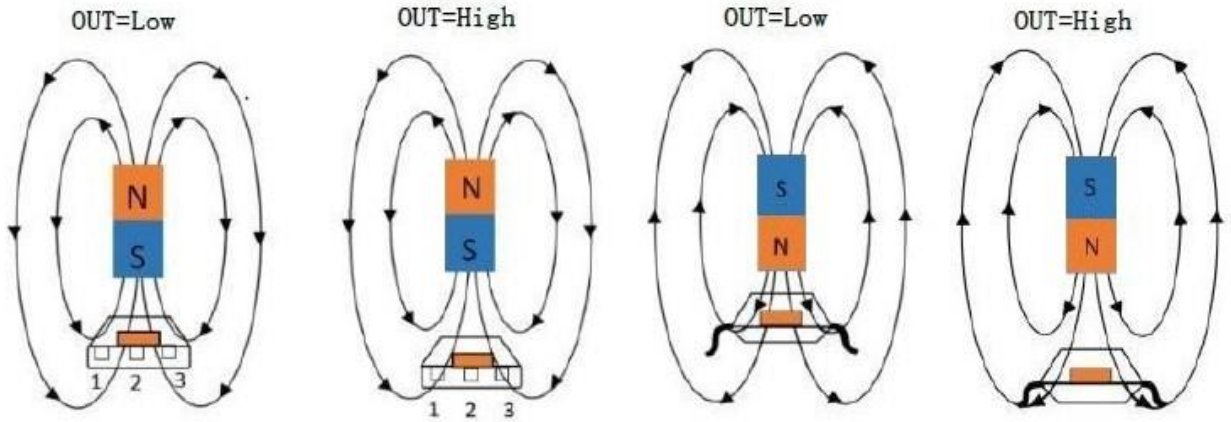

g) PO92 b) PO92 c) SOT23 d) SOT23

Output is low at a small sensing distance between magnet and sensor, for case a) and c)
Output is high at a large sensing distance between magnet and sensor, for case b) and d)

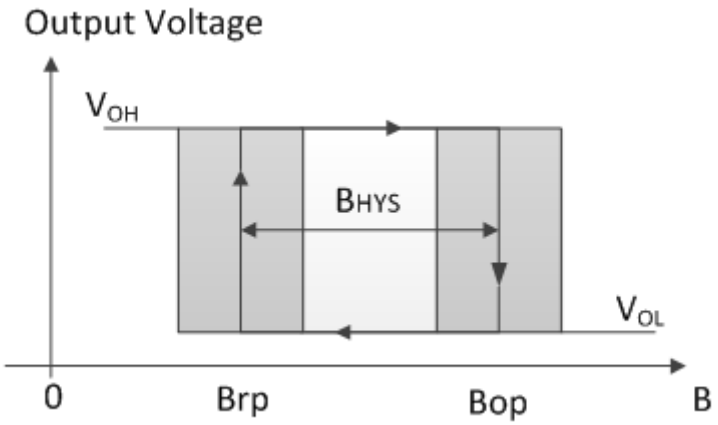

Output behavior of CYD510

ESD Test

The output pin has to be in tri-state (high impedance) for ESD measurements

Symbol	Parameter	Min	Max	Unit
V_{HBM}	Human body model (according to AEC Q100-002)	-12	12	kV

Package Outline
TO92S (UA)
(Packing: bulk, 1000pcs/bag)

Pin Assignment

Pin No.	Name	Function
1	Vcc	Power supply
2	GND	Ground
3	Vout	Output

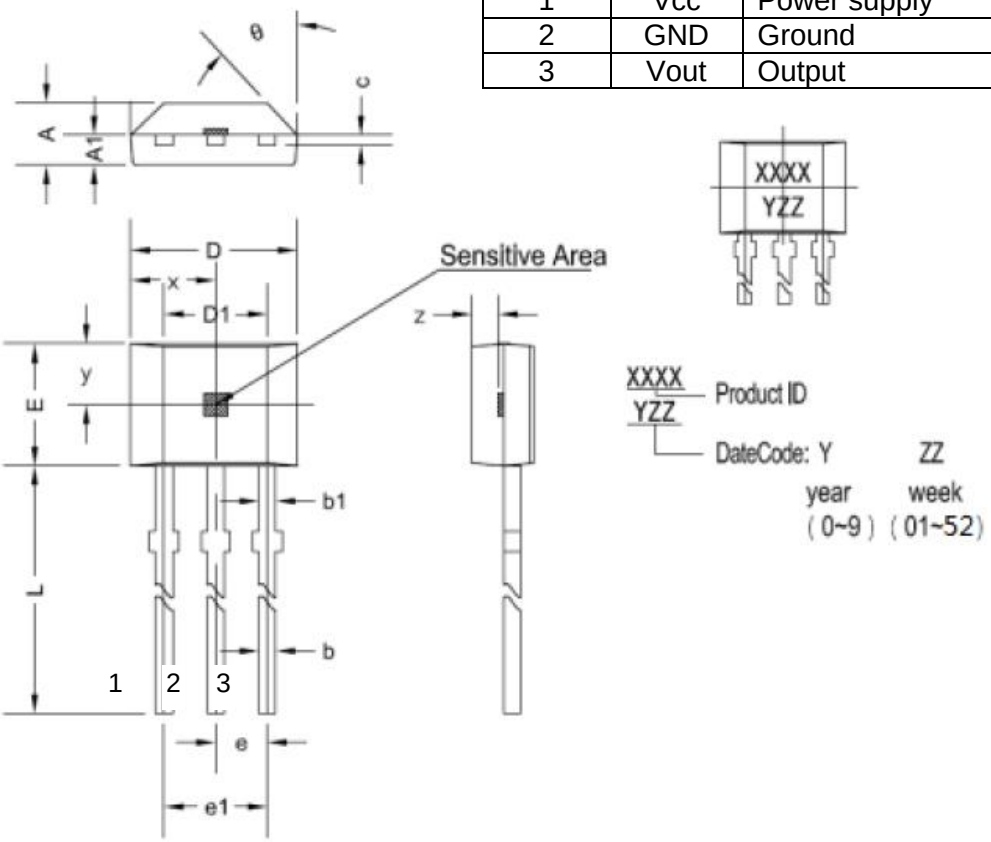

Symbol	Size (mm)		Size (in inches)	
	Min.	Max.	Min.	Max.
A	1.42	1.67	0.056	0.066
A1	0.66	0.86	0.026	0.034
b	0.35	0.56	0.014	0.022
b1	0.40	0.55	0.016	0.022
C	0.36	0.51	0.014	0.020
D	3.90	4.20	0.154	0.165
D1	2.97	3.27	0.117	0.129
E	2.90	3.28	0.114	0.129
e	1.27 typ.		0.050 tpy.	
e1	2.44	2.64	0.096	0.104
L	13.5	15.5	0.531	0.610
x	2.03 typ.		0.080 typ.	
y	1.55 typ.		0.061 typ.	
z	0.50 typ.		0.020 typ.	
θ	45° typ.		45° typ.	

Package Outline

SOT23-3L(LH)
(Packing: Tape&Reel, 3000pcs/reel)

Pin Assignment

Pin No.	Name	Function
1	Vcc	Power supply
2	GND	Ground
3	Vout	Output

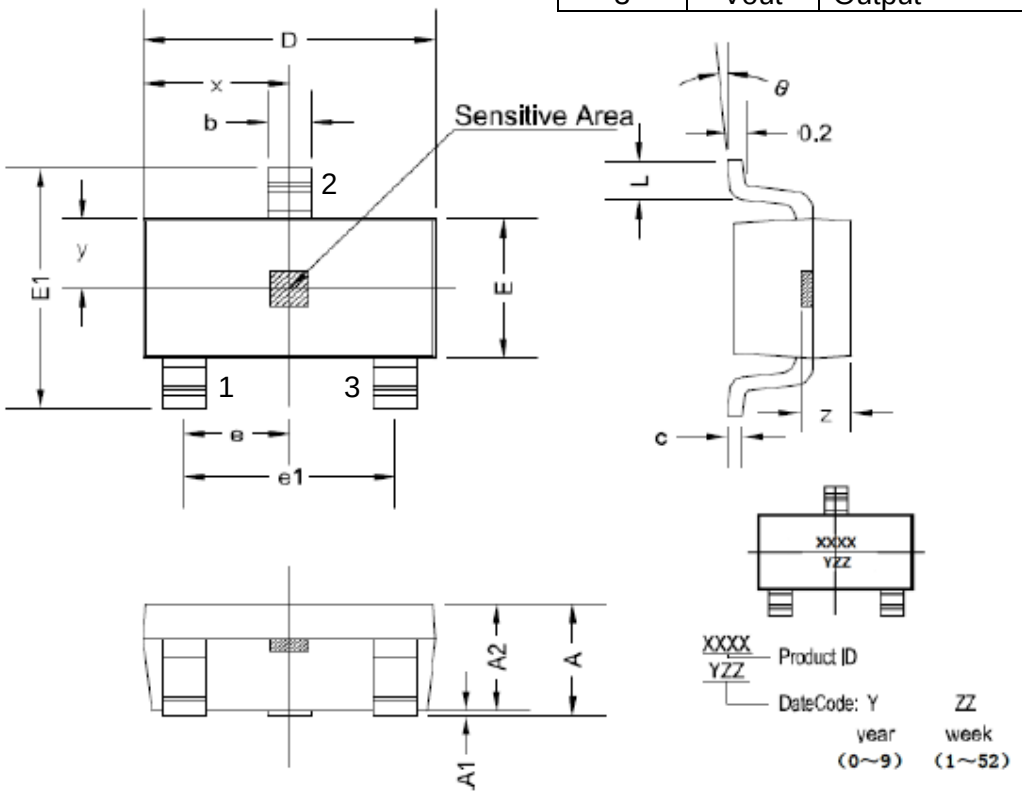

Symbol	Size (mm)		Size (in inches)	
	Min.	Max.	Min.	Max.
A	1.05	1.25	0.041	0.049
A1	0	0.10	0	0.004
A2	1.05	1.15	0.041	0.045
b	0.30	0.50	0.012	0.020
c	0.10	0.20	0.004	0.008
D	2.82	3.02	0.111	0.119
E	1.50	1.70	0.059	0.067
E1	2.65	2.95	0.104	0.116
e	0.95 typ.		0.037 tpy.	
e1	1.80	2.00	0.071	0.079
L	0.30	0.60	0.012	0.024
x	1.46 typ.		0.057 typ.	
y	0.80 typ.		0.032 typ.	
z	0.60 typ.		0.024 typ.	
θ	0°	8°	0°	8°

Unipolar Hall Effect Switch CYD511

Applications

- Automotive brake pedal position detection
- Proximity detection
- Speed measurement
- Weak magnetic field applications
- Solid state switches etc.

Package Type
P/N: CYD511-XX

TO92S (UA)

SOT23-3L (LH)

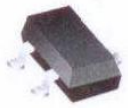

Features

- 2.7V to 30V operation voltage
- Overvoltage protection capability up to 40 V
- High accuracy unipolar switch
- Built-in dynamic offset cancellation
- Open drain output
- Low thermal drift of magnetic sensing
- Qualified according to AEC-Q100 test standard

Order Information

- CYD511-PA
  Package (PA): UA, LH

Specifications

Absolute Maximum Ratings (T_A=25°C)

Parameter	Symbol	Conditions	Rating	Unit
Maximum supply voltage	V_{DDMAX}		30	V
Operating temperature	T_A		-40~+150	°C
Storage temperature	T_S		-40~+165	°C
Maximum output current	I_{OMAX}		25	mA

Electrical Characteristics (T_A=25°C, V_{DD}=12VDC)

Characteristic	Symbol	Test Condition	Min.	Typ.	Max.	Unit
Supply voltage	V_{DD}		2.7		30	V
Supply current	I_{DD}	Output open		2.5	3.2	mA
Low output voltage	$V_{OL(ON)}$	@I_{OUT} = 20mA		130	400	mV
Output leakage current	I_{OH}	Output switch off			0.1	µA
Output voltage	V_{OUT}				30	V
Output voltage fall time	t_f	V_{DD}=12V; R_L=820Ω; C_L=20pF			1	µs
Output voltage rise time	t_r				1	µs
Delay time	t_d			18		µs

Magnetic Characteristics (T_A=25°C, V_{DD}=12VDC)

Characteristic	Symbol	Test Condition	Min.	Typ.	Max.	Unit
Operating point (On point)	B_{OP}	Pullup resistor R_L=1kΩ, Load capacitor C_L=20pF		8		mT
Release point (Off point)	B_{RP}			10		mT
Hysteresis	B_{HYS}			2		mT
Temperature coefficient	Tc			-1000		ppm/°C

Markt Schwabener Str. 8
85464 Finsing
Germany

Tel.: +49 (0)8121-2574100
Fax: +49 (0)8121-2574101
Email: info@chenyang-gmbh.com
http://www.chenyang-gmbh.com

General Specifications

CYD511 Hall Effect Switch is a monolithic integrated circuit which switches in response to magnetic field. If a magnetic field with flux lines perpendicular to the sensitive area is applied to the sensor, the biased Hall plate forces a Hall voltage proportional to this field. The Hall voltage is compared with the actual threshold level in the comparator. If the magnetic field exceeds the threshold levels, the output stage is switched to the appropriate state. The built-in hysteresis eliminates oscillation and provides switching behavior of output without bouncing.

Magnetic offset caused by mechanical stress is compensated by using the chopping offset compensation technique. A serial resistor or diode on the supply line is not required thanks to the built-in reverse voltage protection.

The open drain output is forced to a safe, high-impedance state (tri-state), in any of the following fault conditions: overtemperature, and undervoltage. In addition, the output current is limited (short-circuit protection).
The device is able to withstand a maximum supply voltage of 28 V for unlimited time and features overvoltage capability (40V load dump). The architecture block diagram is shown in the following Fig.

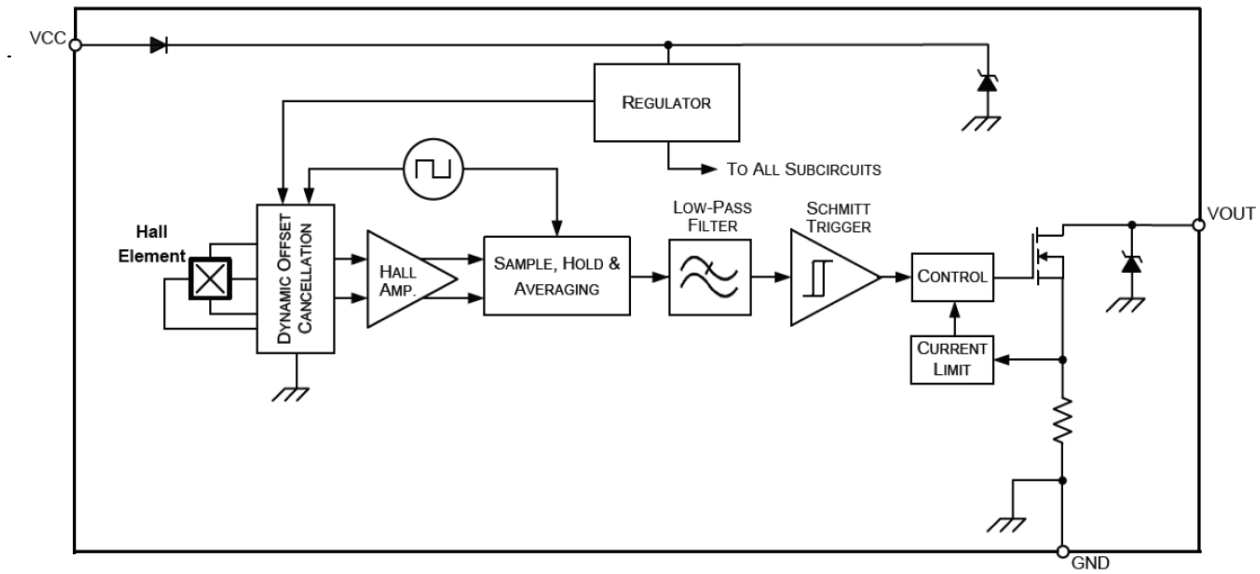

Application Circuits

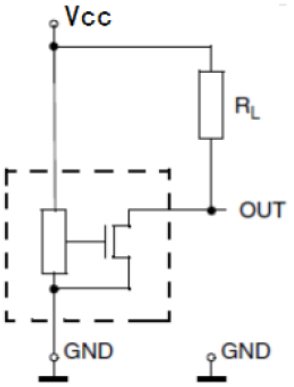

Circuit 1

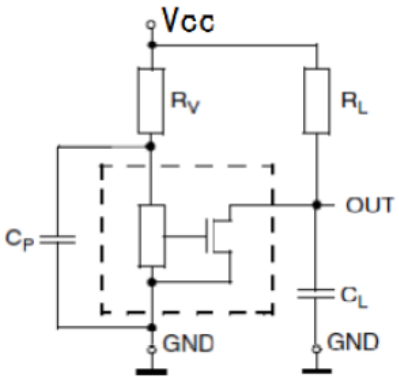

Circuit 2

For applications with disturbances on the supply line or radiated disturbances, a series resistor R_V and two capacitors C_P and C_L, all placed close to the sensor, are recommended.

For example:
R_V =100Ω
C_P = 4.7 nF
C_L = 1 nF.
R_L= 1k~10k Ω

Markt Schwabener Str. 8
85464 Finsing
Germany

Tel.: +49 (0)8121-2574100
Fax: +49 (0)8121-2574101
Email: info@chenyang-gmbh.com
http://www.chenyang-gmbh.com

Application Example

A positive magnetic field is defined as a South Pole near to the marked side of the TO92S package. For the SOT23 package the positive magnetic field is defined as a North Pole near to the marked side.

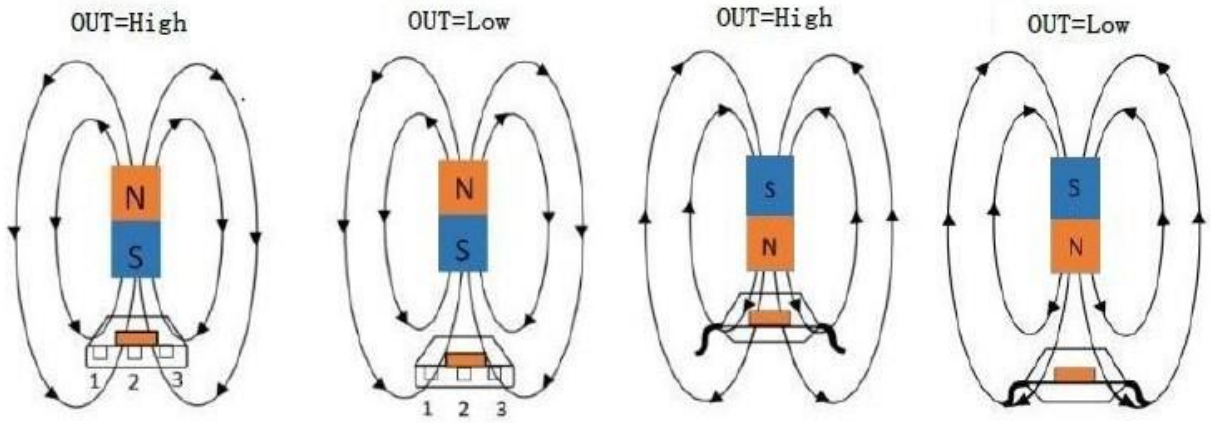

h) PO92 b) PO92 c) SOT23 d) SOT23

Output is low at a small sensing distance between magnet and sensor, for case a) and c)
Output is high at a large sensing distance between magnet and sensor, for case b) and d)

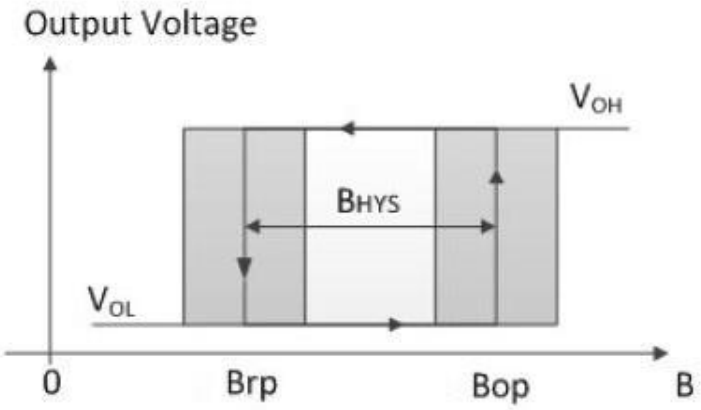

Output behavior of CYD511

ESD Test

The output pin must be in tri-state (high impedance) for ESD measurements

Symbol	Parameter	Min	Max	Unit
V_{HBM}	Human body model (according to AEC Q100-002)	-12	12	kV

Package Outline

TO92S (UA)
(Packing: bulk, 1000pcs/bag)

Pin Assignment

Pin No.	Name	Function
1	Vcc	Power supply
2	GND	Ground
3	Vout	Output

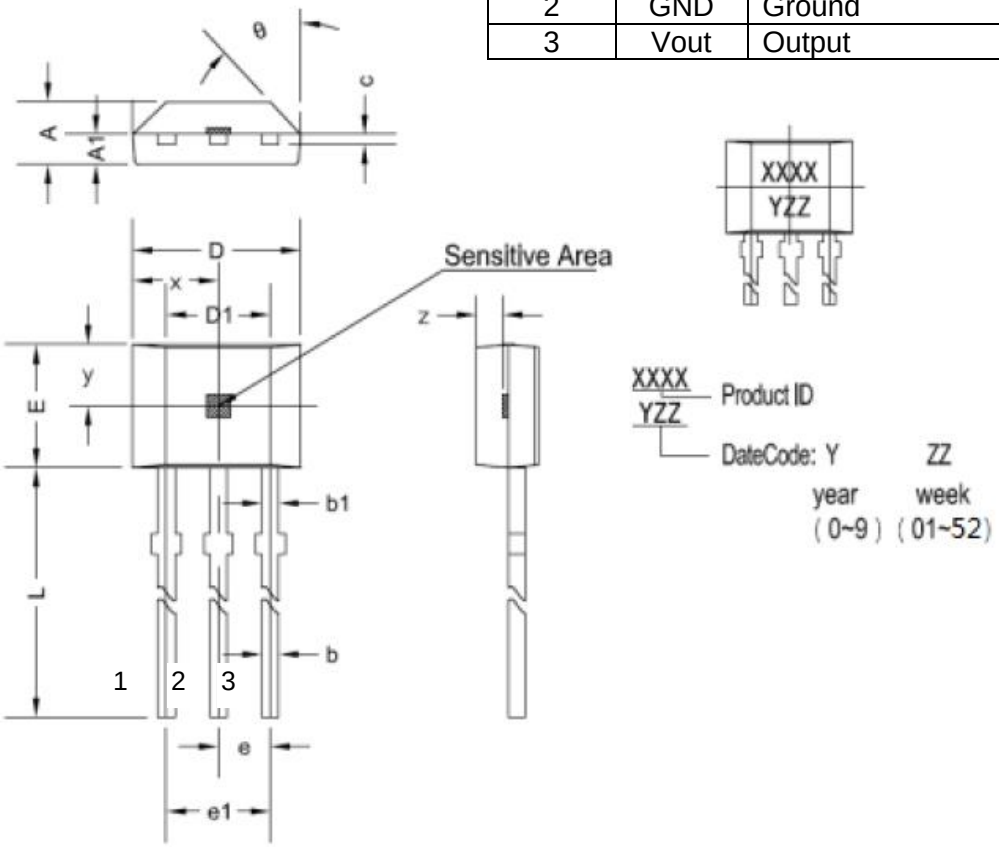

Symbol	Size (mm)		Size (in inches)	
	Min.	Max.	Min.	Max.
A	1.42	1.67	0.056	0.066
A1	0.66	0.86	0.026	0.034
b	0.35	0.56	0.014	0.022
b1	0.40	0.55	0.016	0.022
C	0.36	0.51	0.014	0.020
D	3.90	4.20	0.154	0.165
D1	2.97	3.27	0.117	0.129
E	2.90	3.28	0.114	0.129
e	1.27 typ.		0.050 tpy.	
e1	2.44	2.64	0.096	0.104
L	13.5	15.5	0.531	0.610
x	2.03 typ.		0.080 typ.	
y	1.55 typ.		0.061 typ.	
z	0.50 typ.		0.020 typ.	
θ	45° typ.		45° typ.	

Package Outline
SOT23-3L(LH)
(Packing: Tape&Reel, 3000pcs/reel)

Pin Assignment

Pin No.	Name	Function
1	Vcc	Power supply
2	GND	Ground
3	Vout	Output

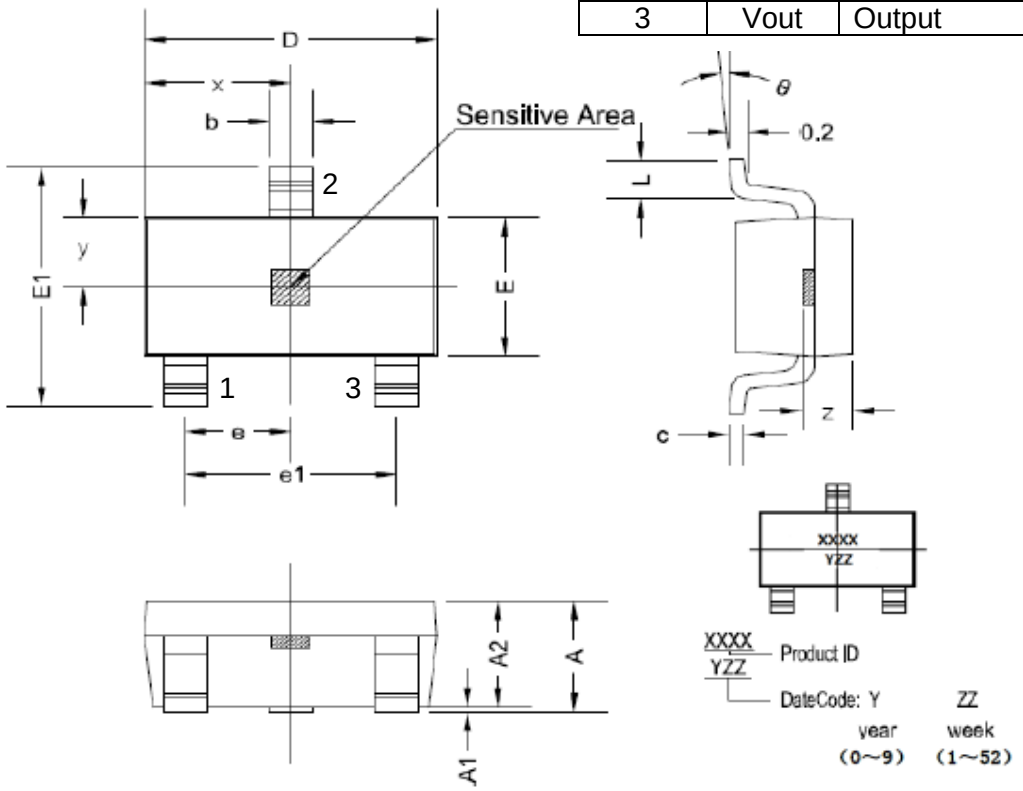

Symbol	Size (mm)		Size (in inches)	
	Min.	Max.	Min.	Max.
A	1.05	1.25	0.041	0.049
A1	0	0.10	0	0.004
A2	1.05	1.15	0.041	0.045
b	0.30	0.50	0.012	0.020
c	0.10	0.20	0.004	0.008
D	2.82	3.02	0.111	0.119
E	1.50	1.70	0.059	0.067
E1	2.65	2.95	0.104	0.116
e	0.95 typ.		0.037 tpy.	
e1	1.80	2.00	0.071	0.079
L	0.30	0.60	0.012	0.024
x	1.46 typ.		0.057 typ.	
y	0.80 typ.		0.032 typ.	
z	0.60 typ.		0.024 typ.	
θ	0°	8°	0°	8°

High-Sensitive Unipolar Hall Effect Switch CYD9636

Applications

- Automotive brake pedal position detection
- Proximity detection
- Speed measurement
- Weak magnetic field applications
- Solid state switches etc.

Features

- 3.8V to 24V operation voltage
- High accuracy unipolar switch
- Built-in dynamic offset cancellation
- Open drain output
- Low thermal drift of magnetic sensing

Order Information

- CYD9636-PA-T
  Package (PA): UA, LH or LT
  Temperature (T): A or K

Package Type
P/N: CYD9636-XX-X

TO92-3L (UA)

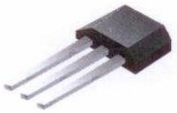

SOT23-3L (LH)

SOT89-3L (LT)

Absolute Maximum Ratings (T_A=25°C)

Parameter	Symbol	Conditions	Rating	Unit
Maximum supply voltage	V_{DDMAX}		28	V
Allowable power dissipation	P_D	TO-92 (UA)	550*	mW
		SOT-23-3L(LH)	300*	mW
		SOT-89-3L(LT)	500*	mW
Operating temperature	T_A	Suffix 'A'	-40~+150	°C
		Suffix 'K'	-40~+125	°C
Storage temperature	T_S		-55~+150	°C
Maximum output current	I_{OMAX}		50	mA

Electrical Characteristics (T_A=25°C, V_{DD}=12VDC)

Characteristic	Symbol	Test Condition	Min.	Typ.	Max.	Unit
Supply voltage	V_{DD}		3.8		24	V
Output sink voltage	$V_{OL(ON)}$	@I_{OUT} = 20mA		130	280	mV
Output leakage current	I_{OH}	Output switch off			0.1	µA
Output breakdown voltage	V_{BV}			28	30	V
Supply current	I_{DD}	Output open		4	6	mA

Magnetic Characteristics (T_A=25°C, V_{DD}=12VDC)

Characteristic	Symbol	Test Condition	Min.	Typ.	Max.	Unit
Operating point	B_{OP}		38	55	72	G
Release point	B_{RP}		20	35	50	G
Hysteresis	B_{HYS}		15	20	27	G
Magnetic Characteristics (T_A=-40°C~+150°C, V_{DD}=12VDC)						
Operating point	B_{OP}		34		77	G
Release point	B_{RP}		18		54	G
Hysteresis	B_{HYS}		10		28	G

Markt Schwabener Str. 8
85464 Finsing
Germany

Tel.: +49 (0)8121-2574100
Fax: +49 (0)8121-2574101
Email: info@chenyang-gmbh.com
http://www.chenyang-gmbh.com

General Specifications

The CYD9636 is a high sensitive unipolar Hall Effect switch IC. The built-in dynamic offset cancellation and temperature compensation of pre-amplifier stage achieves accuracy magnetic sensing. The supply voltage range is from 3.8V to 24VDC and the maximum output current is 50mA.
This Hall Effect switch IC integrates a Hall plate, pre-amplifier with dynamic offset cancellation, hysteresis comparator and protection circuit in single chip. The architecture block diagram is shown in Fig. 1.

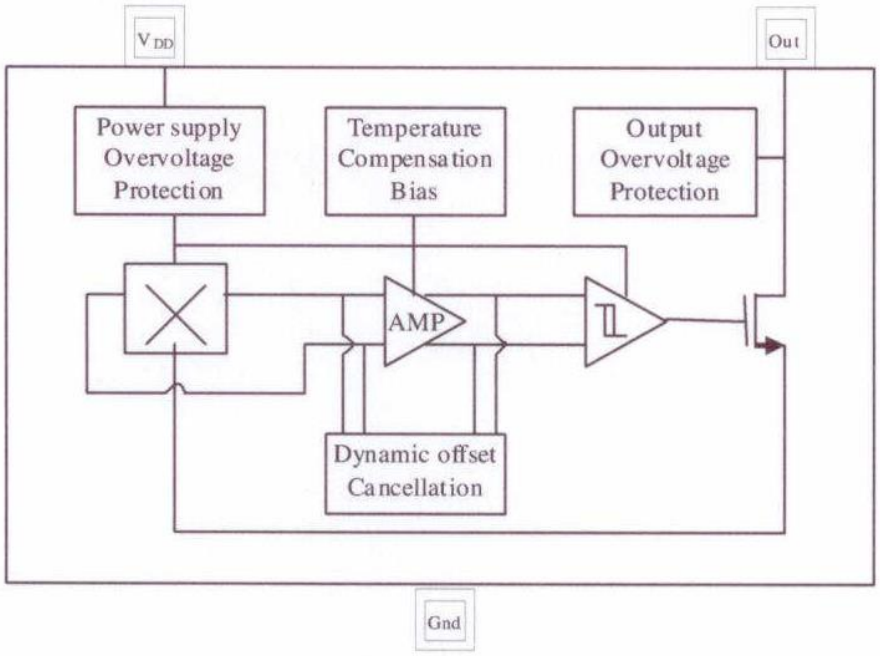

Fig. 1. Functional diagram

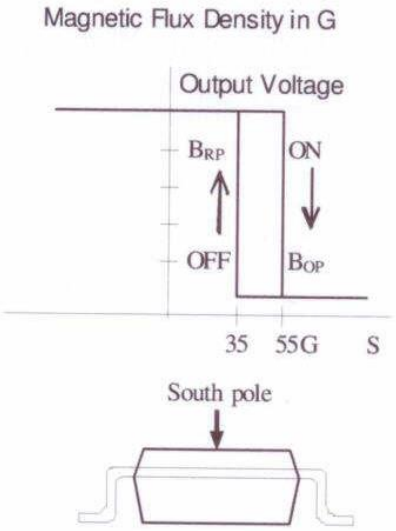

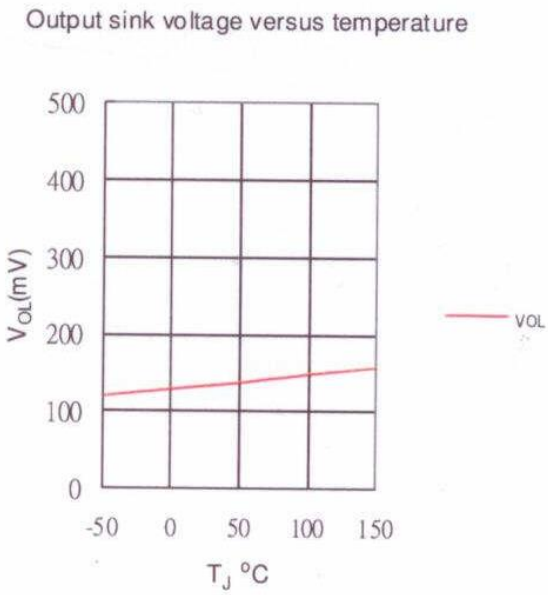

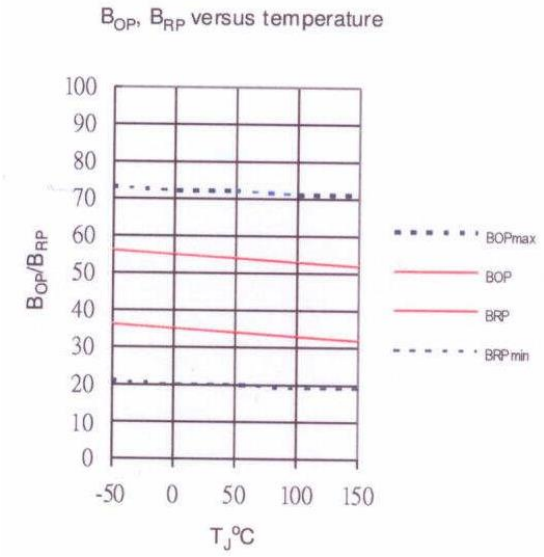

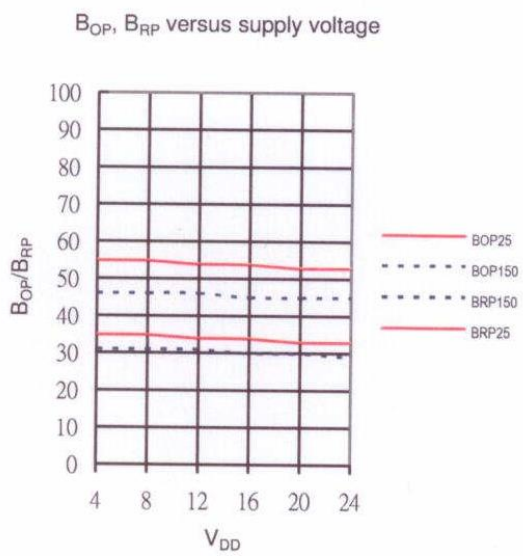

Application Circuit

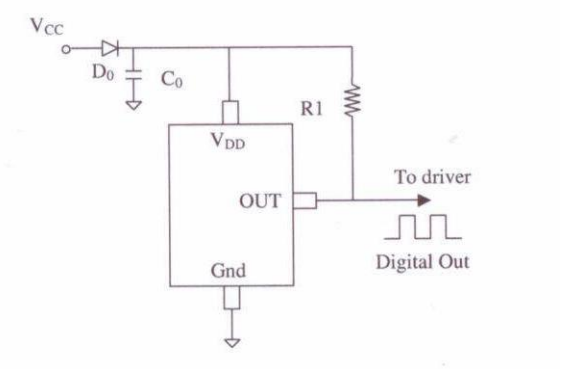

NOTE:

D0: general diode
C0: decoupling capacitor 1µF (recommended)
R1: 1k~10k Ω (recommended)

Package Outline
TO-92(UA)

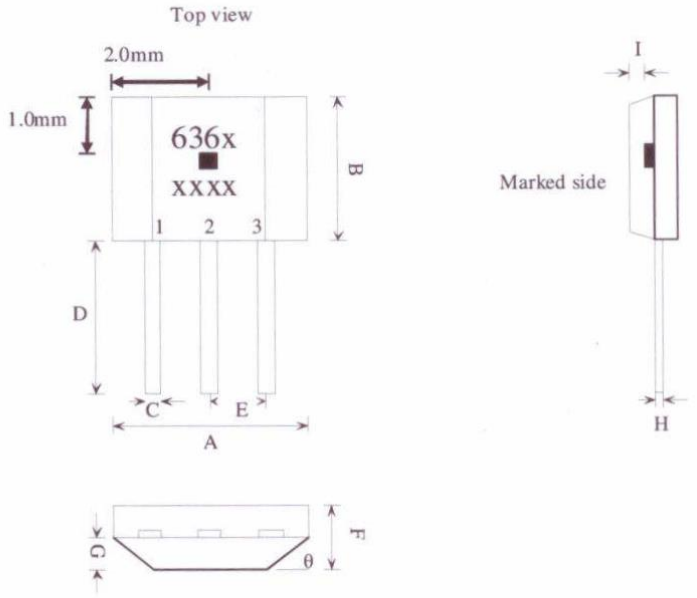

Marking:
Part Number : 636 Temperature code : x
Date Code : xx(Year) xx(Week)

1. VDD/DC power supply
2. GND/DC ground
3. OUT/output pin

SYMBOLS	DIMENSIONS IN MILLIMETERS(mm)		
	MIN	NOM	MAX
A	3.80	4.00	4.20
B	2.90	3.10	3.30
C	0.38	0.45	0.52
D	15.10	15.30	15.50
E	1.24	1.27	1.30
F	1.45	1.50	1.55
G	0.68	0.73	0.78
H	0.36	0.43	0.50
I	0.41	0.43	0.45
θ		45°	

Package Outline
SOT-23(LH)

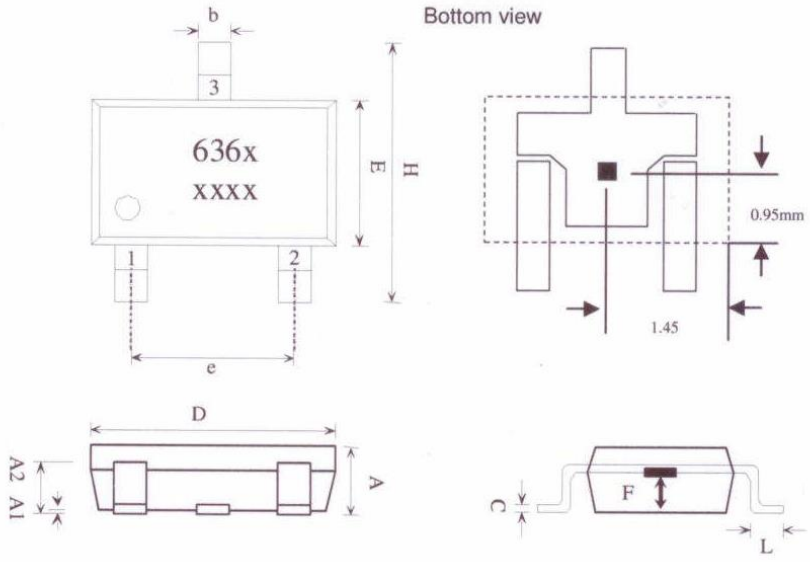

Sensor Location

Bottom view

Marking:
Part Number : 636 Temperature code : x
Date Code : xx(Year) xx(Week)

1. VDD/DC power supply
2. OUT/output pin
3. GND/DC ground

SYMBOLS	DIMENSIONS IN MILLIMETERS(mm)		
	MIN	NOM	MAX
A	1.00	1.10	1.30
A1	0.00	-	0.10
A2	0.70	0.80	0.90
b	0.35	0.40	0.50
C	0.10	0.15	0.25
D	2.70	2.90	3.10
E	1.40	1.80	2.00
F	0.35	0.50	0.65
H	2.60	2.8	3.00
e	1.7	1.9	2.1
L	0.20	-	-

Package Outline
SOT-89(LT)

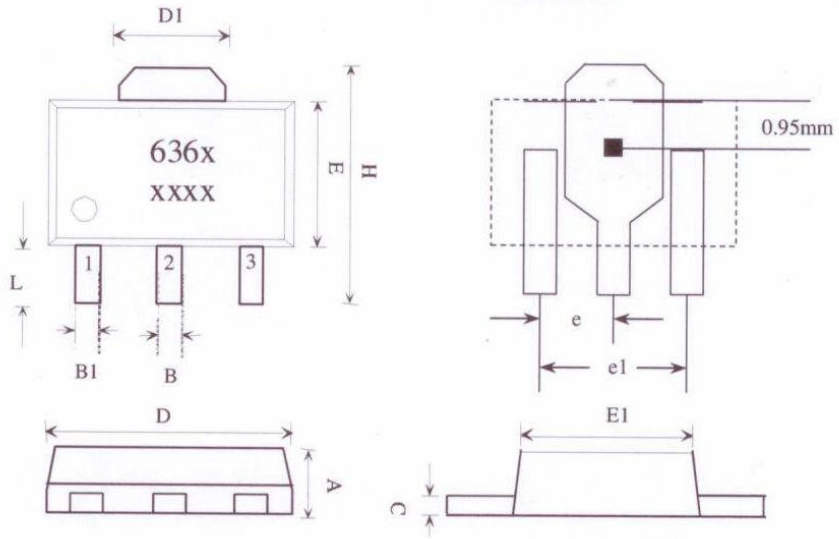

Marking:
Part Number : 636 Temperature code : x
Date Code : xx(Year) xx(Week)

1. VDD/DC power supply
2. GND/DC ground
3. OUT/output pin

SYMBOLS	DIMENSIONS IN MILLIMETERS(mm)		
	MIN	NOM	MAX
A	1.40	1.50	1.60
B	0.44	0.50	0.56
B1	0.36	0.42	0.48
C	0.35	0.40	0.44
D	4.40	4.50	4.60
D1	1.52	1.67	1.83
E	2.30	2.45	2.60
E1	2.13	2.21	2.29
e	-	1.50	-
e1	-	3.00	-
H	3.94	4.10	4.25
L	0.89	1.05	1.20

High-Sensitive Unipolar Hall Effect Switch CYD9639

Applications

- Automotive brake pedal position detection
- Proximity detection
- Speed measurement
- Weak magnetic field applications
- Solid state switches etc.

Features

- 3.8V to 24V operation voltage
- High accuracy unipolar switch
- Built-in dynamic offset cancellation
- Open drain output
- Low thermal drift of magnetic sensing

Order Information

- CYD9639-PA-T
  Package (PA): UA, LH or LT
  Temperature (T): A or K

.

Package Type
P/N: CYD9639-XX-X

TO92-3L (UA)

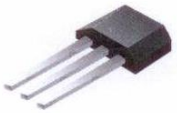

SOT23-3L (LH)

SOT89-3L (LT)

Absolute Maximum Ratings (T_A=25°C)

Parameter	Symbol	Conditions	Rating	Unit
Maximum supply voltage	V_{DDMAX}		28	V
Allowable power dissipation	P_D	TO-92 (UA)	550*	mW
		SOT-23-3L(LH)	300*	mW
		SOT-89-3L(LT)	500*	mW
Operating temperature	T_A	Suffix 'A'	-40~+150	°C
		Suffix 'K'	-40~+125	°C
Storage temperature	T_S		-55~+150	°C
Maximum output current	I_{OMAX}		50	mA

Electrical Characteristics (T_A=25°C, V_{DD}=12VDC)

Characteristic	Symbol	Test Condition	Min.	Typ.	Max.	Unit
Supply voltage	V_{DD}		3.8		24	V
Output sink voltage	$V_{OL(ON)}$	@I_{OUT} = 20mA		130	280	mV
Output leakage current	I_{OH}	Output switch off			0.1	µA
Output breakdown voltage	V_{BV}			28	30	V
Supply current	I_{DD}	Output open		4	6	mA

Magnetic Characteristics (T_A=25°C, V_{DD}=12VDC)

Characteristic	Symbol	Test Condition	Min.	Typ.	Max.	Unit
Operating point	B_{OP}		-72	-55	-38	G
Release point	B_{RP}		-50	-35	-20	G
Hysteresis	B_{HYS}		15	20	27	G
Magnetic Characteristics (T_A=-40°C~+150°C, V_{DD}=12VDC)						
Operating point	B_{OP}		-77		-34	G
Release point	B_{RP}		-54		-18	G
Hysteresis	B_{HYS}		10		28	G

Markt Schwabener Str. 8
85464 Finsing
Germany

Tel.: +49 (0)8121-2574100
Fax: +49 (0)8121-2574101
Email: info@chenyang-gmbh.com
http://www.chenyang-gmbh.com

General Specifications

The CYD9639 is a high sensitive unipolar Hall Effect switch IC. The built-in dynamic offset cancellation and temperature compensation of pre-amplifier stage achieves accuracy magnetic sensing. The supply voltage range is from 3.8V to 24VDC and the maximum output current is 50mA.
This Hall Effect switch IC integrates a Hall plate, pre-amplifier with dynamic offset cancellation, hysteresis comparator and protection circuit in single chip. The architecture block diagram is shown in Fig. 1.

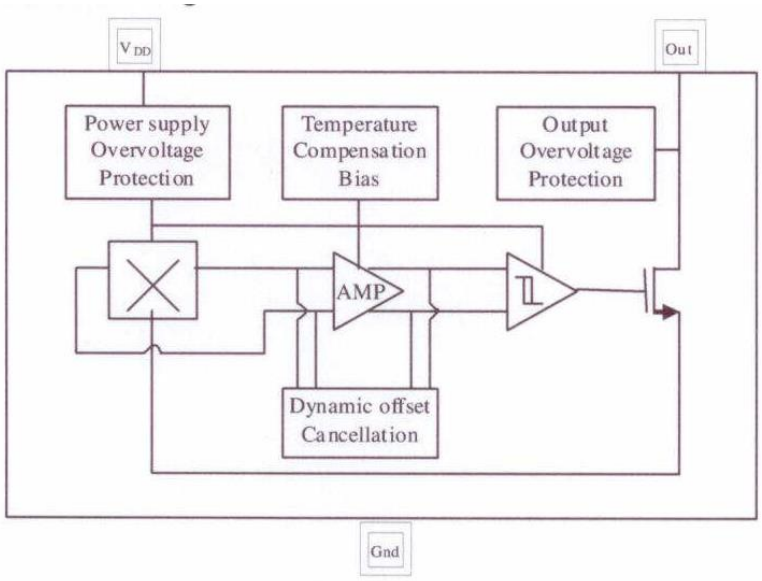

Fig. 1. Functional diagram

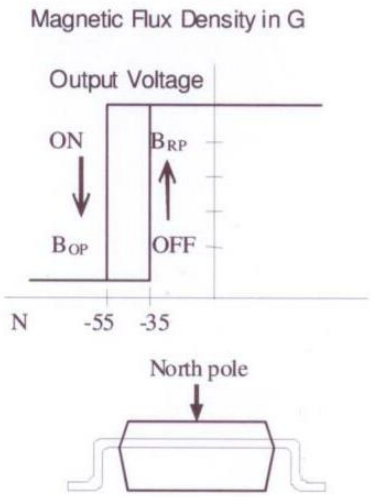

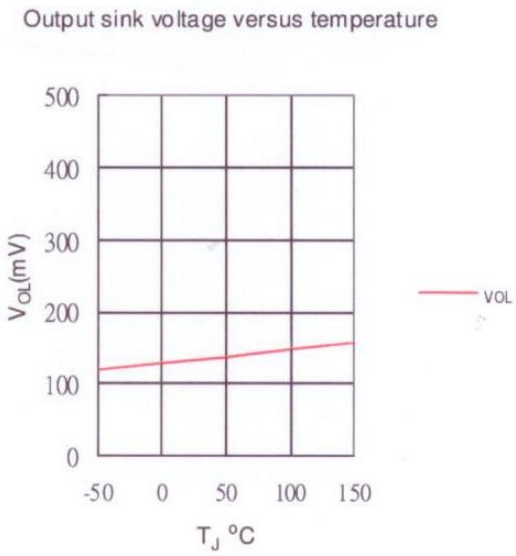

Markt Schwabener Str. 8
85464 Finsing
Germany

Tel.: +49 (0)8121-2574100
Fax: +49 (0)8121-2574101
Email: info@chenyang-gmbh.com
http://www.chenyang-gmbh.com

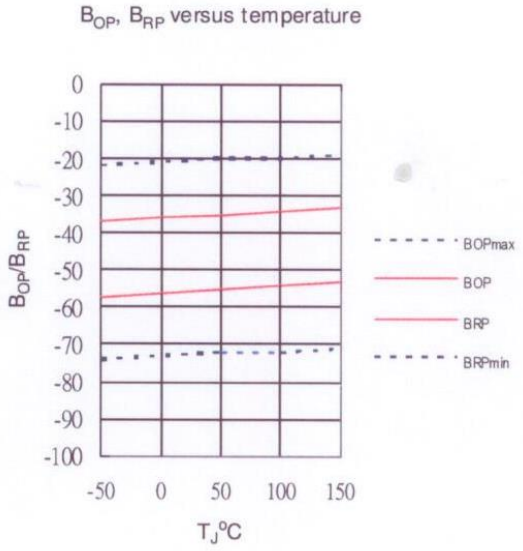

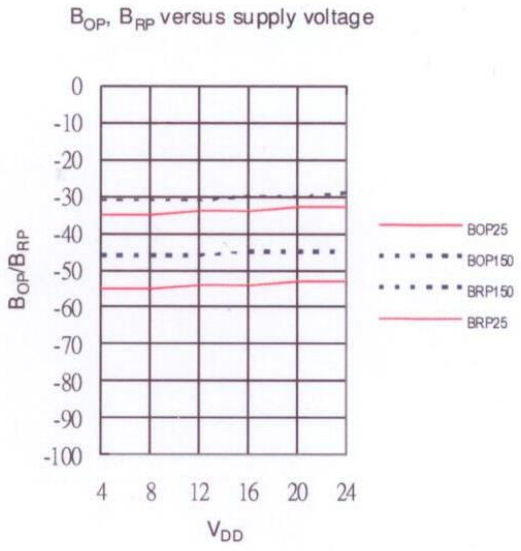

Application Circuit

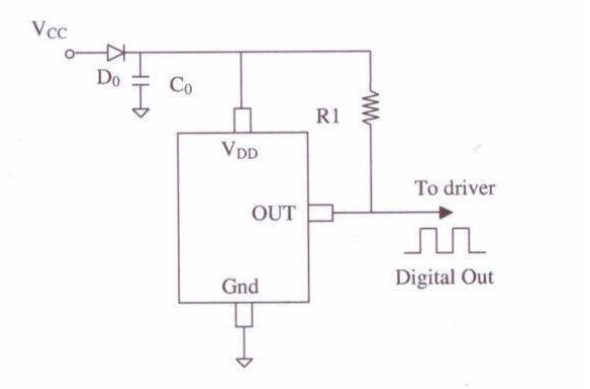

NOTE:

D0: general diode
C0: decoupling capacitor 1µF (recommended)
R1: 1k~10k Ω

Package Outline
TO-92(UA)

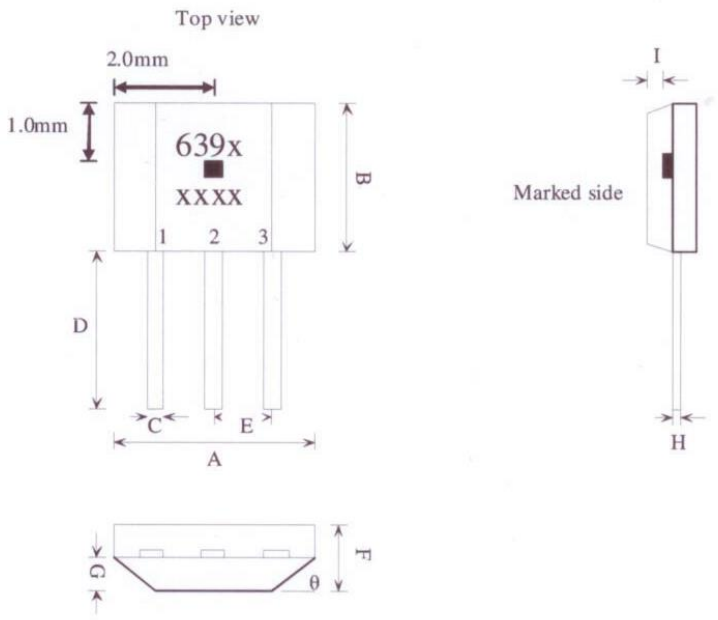

Marking:
Part Number : 639 Temperature code : x
Date Code : xx(Year) xx(Week)

1. VDD/DC power supply
2. GND/DC ground
3. OUT/output pin

SYMBOLS	DIMENSIONS IN MILLIMETERS(mm)		
	MIN	NOM	MAX
A	3.80	4.00	4.20
B	2.90	3.10	3.30
C	0.38	0.45	0.52
D	15.10	15.30	15.50
E	1.24	1.27	1.30
F	1.45	1.50	1.55
G	0.68	0.73	0.78
H	0.36	0.43	0.50
I	0.41	0.43	0.45
θ		45°	

Package Outline
SOT-23(LH)

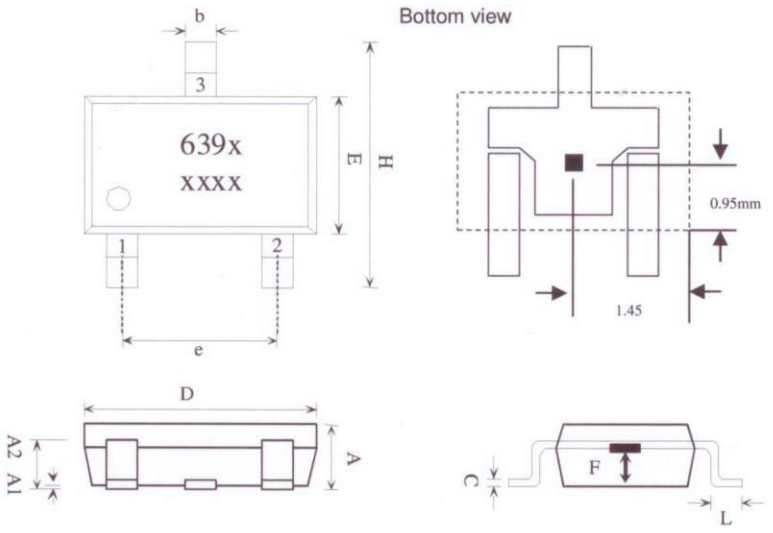

Sensor Location

Bottom view

Marking:
Part Number : 639 Temperature code : x
Date Code : xx(Year) xx(Week)

1. VDD/DC power supply
2. OUT/output pin
3. GND/DC ground

SYMBOLS	DIMENSIONS IN MILLIMETERS(mm)		
	MIN	NOM	MAX
A	1.00	1.10	1.30
A1	0.00	-	0.10
A2	0.70	0.80	0.90
b	0.35	0.40	0.50
C	0.10	0.15	0.25
D	2.70	2.90	3.10
E	1.40	1.80	2.00
F	0.35	0.50	0.65
H	2.60	2.8	3.00
e	1.7	1.9	2.1
L	0.20	-	-

Package Outline
SOT-89(LT)

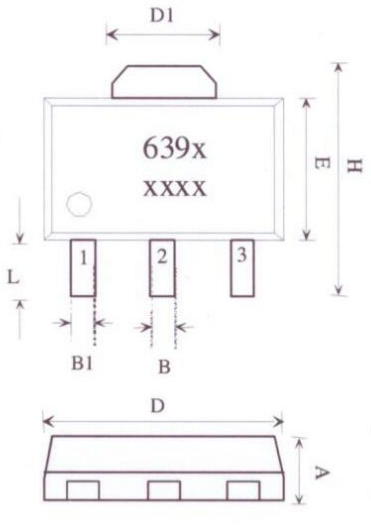

Sensor Location

Bottom view

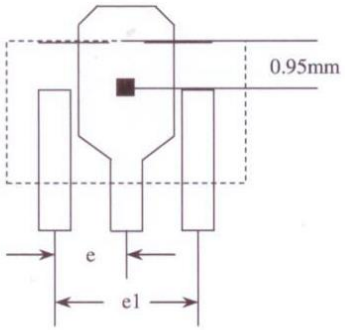

Marking:
Part Number : 639 Temperature code : x
Date Code : xx(Year) xx(Week)

1. VDD/DC power supply
2. GND/DC ground
3. OUT/output pin

SYMBOLS	DIMENSIONS IN MILLIMETERS(mm)		
	MIN	NOM	MAX
A	1.40	1.50	1.60
B	0.44	0.50	0.56
B1	0.36	0.42	0.48
C	0.35	0.40	0.44
D	4.40	4.50	4.60
D1	1.52	1.67	1.83
E	2.30	2.45	2.60
E1	2.13	2.21	2.29
e	-	1.50	-
e1	-	3.00	-
H	3.94	4.10	4.25
L	0.89	1.05	1.20

General Purpose Unipolar Hall Effect Switch CYD3623

Applications

- VCD/DVD loader
- Cover detector
- Speed Measurement
- Home applications
- Home safety etc.

Features

- 2.5V to 18V operation voltage
- Built-in dynamic offset cancellation
- Small size
- High balance and low thermal drift of magnetic sensing

Order Information

- CYD3623-S
. Package: SOT23

Package Type

P/N: CYD3623-S

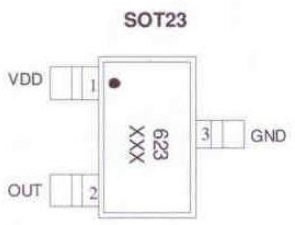

1. VDD/DC power supply
2. Out/output pin
3. GND/DC ground

Specifications

Absolute Maximum Ratings (T_A=25°C)

Parameter	Symbol	Conditions	Rating	Unit
Maximum supply voltage	V_{DDMAX}		18	V
Allowable power dissipation	P_D	SOT-23	300*	mW
Operating temperature	T_A		-40~+125	°C
Storage temperature	T_S		-55~+150	°C
Maximum Junction Temperature	Tjmax		150	°C
Maximum output current	I_{OMAX}		25	mA

* On 50mm x 50 mm x 1.6mm glass epoxy board

Electrical Characteristics (T_A=25°C, V_{DD}=12VDC)

Characteristic	Symbol	Test Condition	Min.	Typ.	Max.	Unit
Supply voltage	V_{DD}		2.5		18	V
Output sink voltage	$V_{DS(ON)}$	@I_{OUT} = 20mA		0.3	0.5	V
Output breakdown voltage	V_{BV}			22	30	V
Supply current	I_{DD}	Output open		6	10	mA

Magnetic Characteristics (T_A=25°C, V_{DD}=12VDC)

Characteristic	Symbol	Test Condition	Min.	Typ.	Max.	Unit
Operating point	B_{OP}		100	105	110	G
Release point	B_{RP}		70	85	100	G
Hysteresis	B_{HYS}		10	20	30	G

Markt Schwabener Str. 8
85464 Finsing
Germany

Tel.: +49 (0)8121-2574100
Fax: +49 (0)8121-2574101
Email: info@chenyang-gmbh.com
http://www.chenyang-gmbh.com

General Specifications

The CYD3623 is designed for magnetic actuating using a unipolar magnetic field. The built-in dynamic offset cancellation of pre-amplifier stage achieves optimal symmetrical magnetic sensing. The supply voltage range is from 2.5V to 18V and the maximum output current is 25mA. This Hall Effect switch IC integrates a sensor plate, a pre-amplifier with dynamic offset cancellation and hysteresis comparator in single chip. The architecture block diagram is shown in Fig. 1.

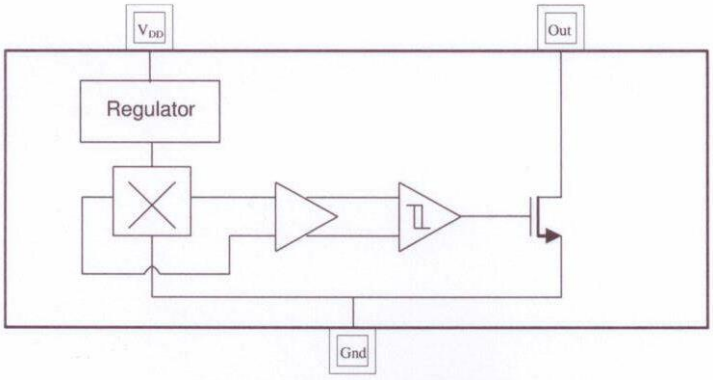

Fig. 1. Functional diagram

.

Magnetic Flux Density in Gauss

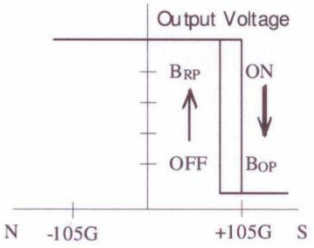

Output sink voltage versus temperature

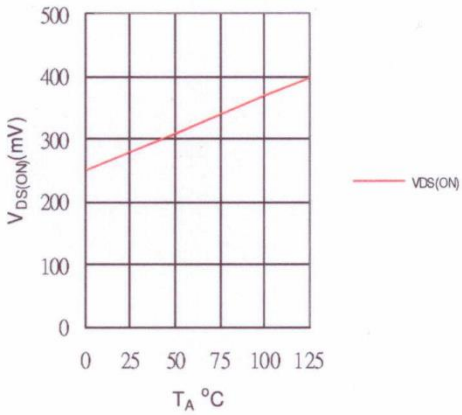

B_{OP}, B_{RP} versus temperature

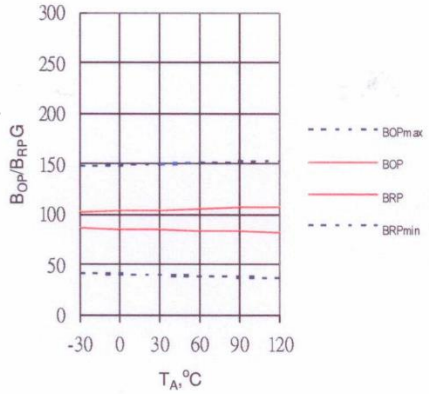

B_{OP}, B_{RP} versus supply voltage

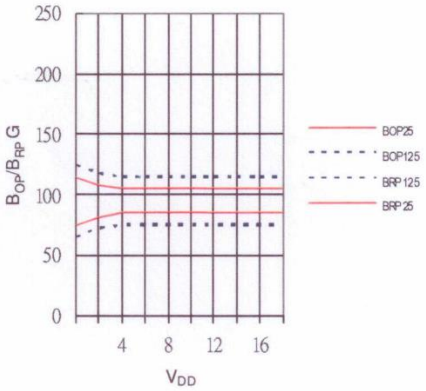

Package Outline
SOT-23(LH)

Sensor Location

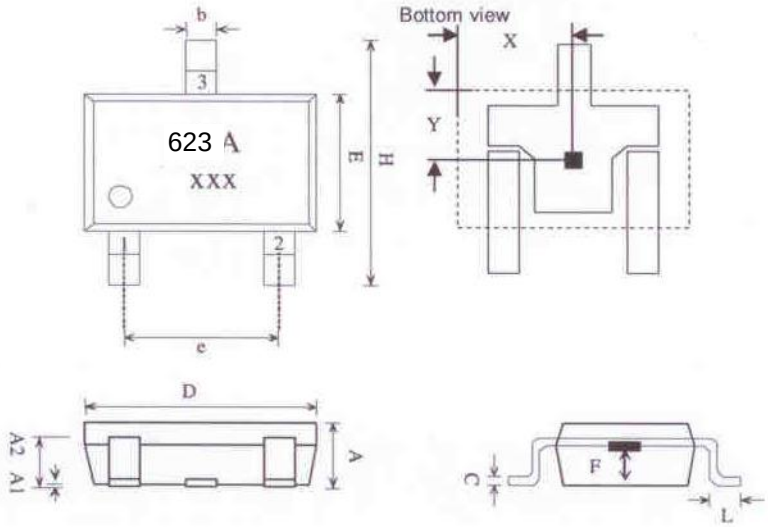

Marking:
Part Numbe 623
Date Code : x(rear) xx(Week)

1. VDD/DC power supply
2. OUT/output pin
3. GND/DC ground

SYMBOLS	DIMENSIONS IN MILLIMETERS(mm)		
	MIN	NOM	MAX
A	1.00	1.10	1.30
A1	0.00	-	0.10
A2	0.70	0.80	0.90
b	0.35	0.40	0.50
C	0.10	0.15	0.25
D	2.70	2.90	3.10
E	1.40	1.80	2.00
F	0.35	0.50	0.65
H	2.60	2.8	3.00
e	1.7	1.9	2.1
L	0.20	-	-
Sensor Location			
X	1.3	1.45	1.6
Y	0.7	0.85	1.0

Application Circuit

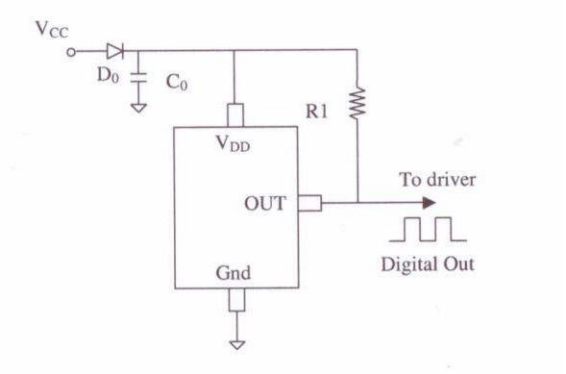

NOTE:

D0: general diode
C0: decoupling capacitor 1µF
(recommended)
R1: 1k~10k Ω (recommended)

.

Markt Schwabener Str. 8
85464 Finsing
Germany

Tel.: +49 (0)8121-2574100
Fax: +49 (0)8121-2574101
Email: info@chenyang-gmbh.com
http://www.chenyang-gmbh.com

General Purpose Unipolar Hall Effect Switch CYD9821A

Applications

- VCD/DVD loader, CD/DVD-Rom
- Cover detector
- Speed Measurement
- Home applications
- Home safety etc.

Features

- 2.5V to 18V operation voltage
- Built-in dynamic offset cancellation
- Small size
- High balance and low thermal drift of magnetic sensing

Order Information

- CYD9821A-PA
  Package(PA): UA or LH or LT

Package Type

P/N: CYD9821A-xx

TO92-3L (UA)

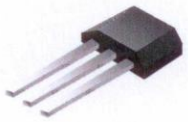

SOT23-3L (LH)

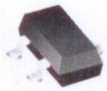

SOT89-3L (LT)

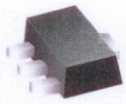

Specifications

Absolute Maximum Ratings (T_A=25°C)

Parameter	Symbol	Conditions	Rating	Unit
Maximum supply voltage	V_{DDMAX}		18	V
Allowable power dissipation	P_D	TO-92(UA)	550*	mW
		SOT-23(LH)	300*	
		SOT-89(LT)	500*	
Operating temperature	T_A		-40~+125	°C
Storage temperature	T_S		-55~+150	°C
Maximum output current	I_{OMAX}		25	mA

* On 50mm x 50 mm x 1.6mm glass epoxy board

Electrical Characteristics (T_A=25°C, V_{DD}=12VDC)

Characteristic	Symbol	Test Condition	Min.	Typ.	Max.	Unit
Supply voltage	V_{DD}		2.5		18	V
Supply voltage	V_{DD}	R_{DD}≥200Ω	2.5		26	V
Supply current through protection device	I_{DD}	R_{DD}≥200Ω			50	mA
Output sink voltage	$V_{DS(ON)}$	@I_{OUT} = 20mA		0.3	0.5	V
Output breakdown voltage	V_{BV}			22	30	V
Supply current	I_{DD}	Output open		6	10	mA

Markt Schwabener Str. 8
85464 Finsing
Germany

Tel.: +49 (0)8121-2574100
Fax: +49 (0)8121-2574101
Email: info@chenyang-gmbh.com
http://www.chenyang-gmbh.com

Magnetic Characteristics (T_A=25°C, V_{DD}=12VDC)

Characteristic	Symbol	Test Condition	Min.	Typ.	Max.	Unit
Operating point	B_{OP}		90	105	120	G
Release point	B_{RP}		55	85	110	G
Hysteresis	B_{HYS}		10	20	35	G

General Specifications

The CYD9821A is designed for magnetic actuating using a unipolar magnetic field. The built-in dynamic offset cancellation of pre-amplifier stage achieves optimal symmetrical magnetic sensing. The supply voltage range is from 2.5V to 18V and the maximum output current is 25mA. This Hall Effect switch IC integrates the sensor, pre-amplifier with dynamic offset cancellation and hysteresis comparator in single chip. The architecture block diagram is shown in Fig. 1.

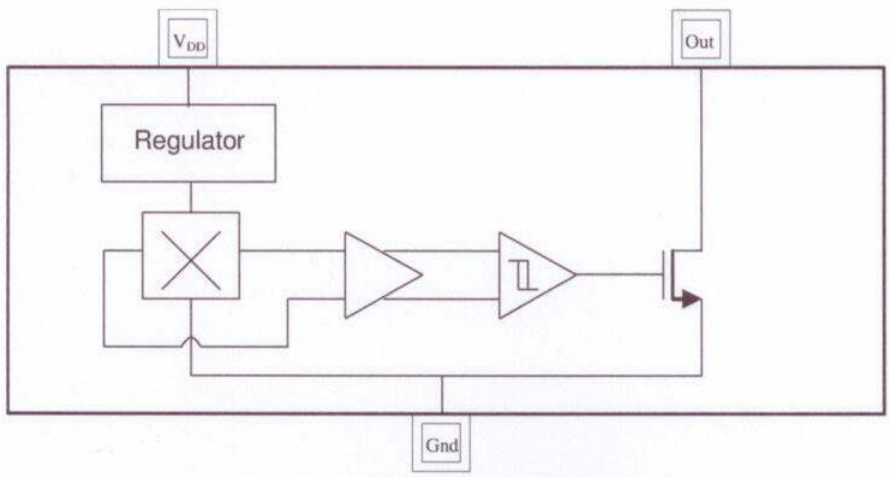

Fig. 1. Functional diagram

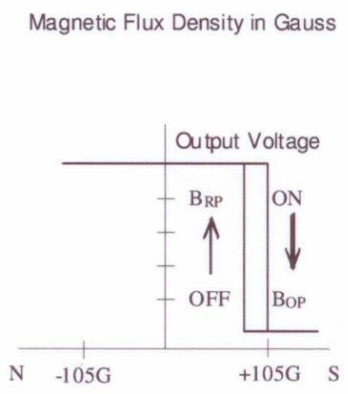

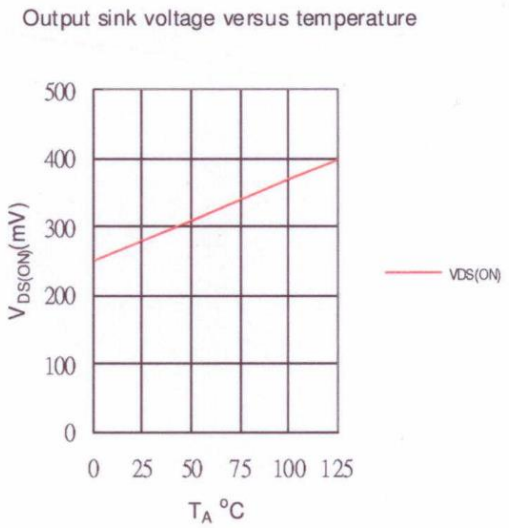

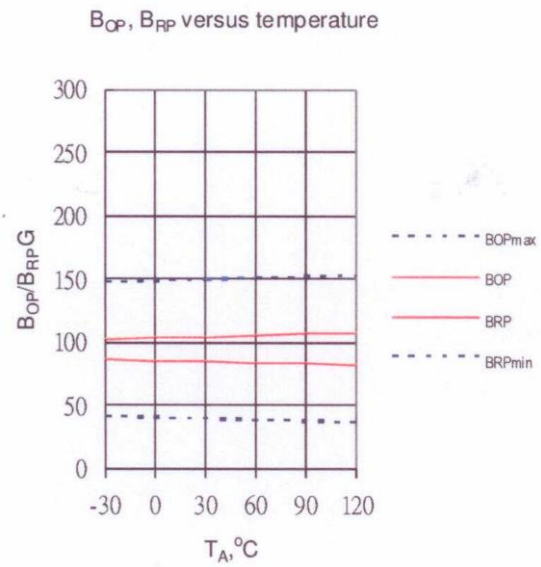

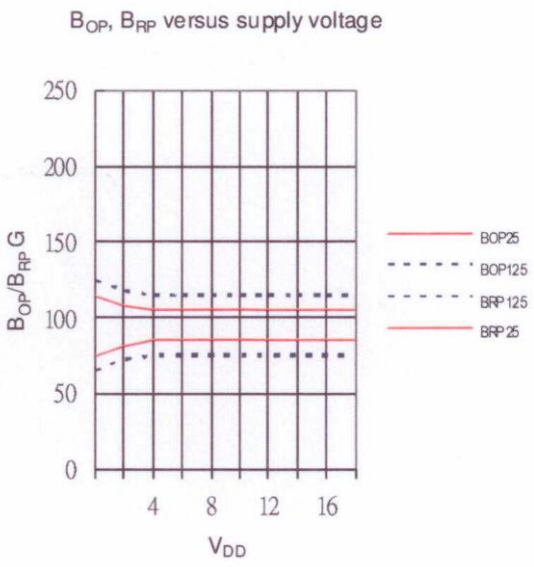

Application Circuit

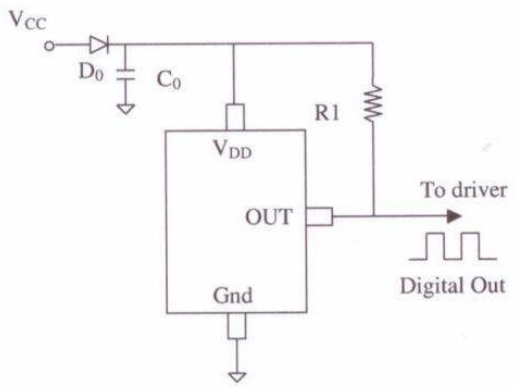

NOTE:

D0: general diode
C0: decoupling capacitor 1µF (recommended)
R1: 1k~10k Ω

Package Outline
TO-92(UA)

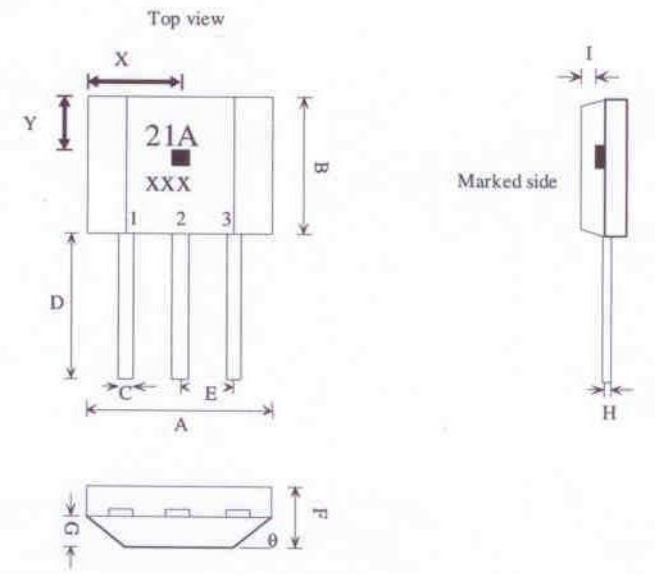

Marking:
Part Number : 21A
Date Code : x(Year) xx(Week)

1. VDD/DC power supply
2. GND/DC ground
3. OUT/output pin

SYMBOLS	DIMENSIONS IN MILLIMETERS(mm)		
	MIN	NOM	MAX
A	3.80	4.00	4.20
B	2.90	3.10	3.30
C	0.38	0.45	0.52
D	15.10	15.30	15.50
E	1.24	1.27	1.30
F	1.45	1.50	1.55
G	0.68	0.73	0.78
H	0.36	0.43	0.50
I	0.41	0.43	0.45
θ		45°	
Sensor Location			
X	1.85	2.0	2.15
Y	0.85	1.0	1.15

Package Outline
SOT-23(LH)

Sensor Location

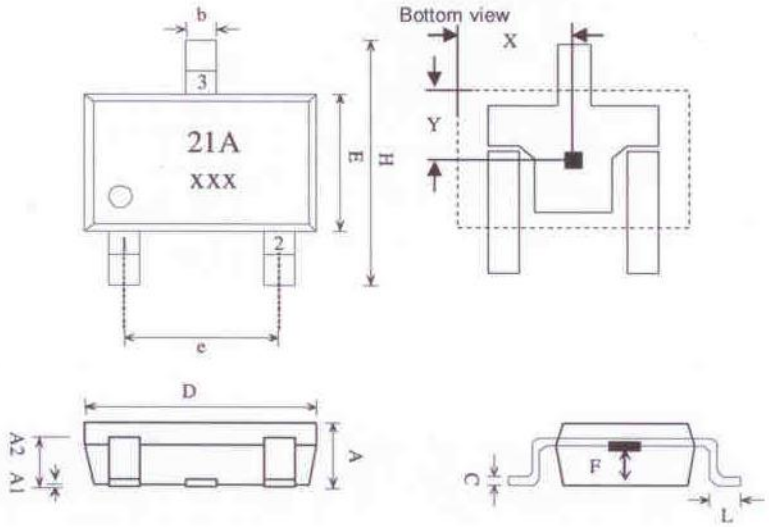

Marking:
Part Number : 21A
Date Code : x(Year) xx(Week)

1. VDD/DC power supply
2. OUT/output pin
3. GND/DC ground

SYMBOLS	DIMENSIONS IN MILLIMETERS(mm)		
	MIN	NOM	MAX
A	1.00	1.10	1.30
A1	0.00	-	0.10
A2	0.70	0.80	0.90
b	0.35	0.40	0.50
C	0.10	0.15	0.25
D	2.70	2.90	3.10
E	1.40	1.80	2.00
F	0.35	0.50	0.65
H	2.60	2.8	3.00
e	1.7	1.9	2.1
L	0.20	-	-
Sensor Location			
X	1.3	1.45	1.6
Y	0.7	0.85	1.0

Package Outline
SOT-89(LT)

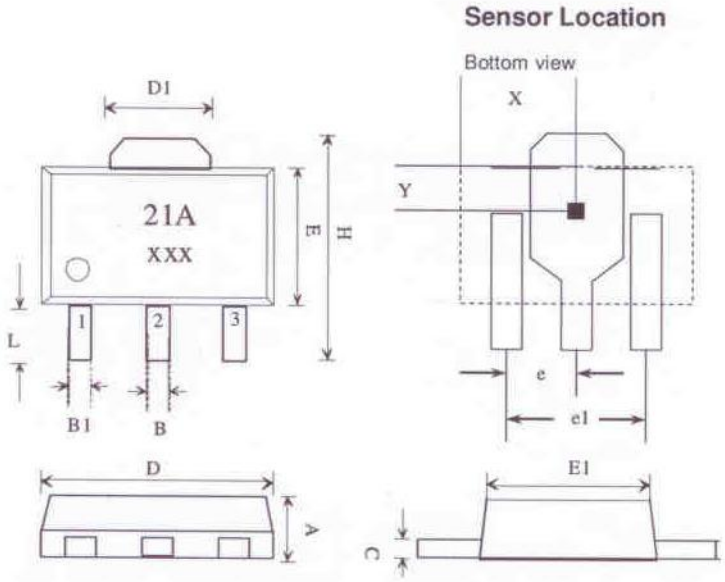

Marking:
Part Number : 21A
Date Code : x(Year) xx(Week)

1. VDD/DC power supply
2. GND/DC ground
3. OUT/output pin

SYMBOLS	DIMENSIONS IN MILLIMETERS(mm)		
	MIN	NOM	MAX
A	1.40	1.50	1.60
B	0.44	0.50	0.56
B1	0.36	0.42	0.48
C	0.35	0.40	0.44
D	4.40	4.50	4.60
D1	1.52	1.67	1.83
E	2.30	2.45	2.60
E1	2.13	2.21	2.29
e	-	1.50	-
e1	-	3.00	-
H	3.94	4.10	4.25
L	0.89	1.05	1.20
Sensor Location			
X	2.1	2.25	2.4
Y	0.8	0.95	1.1

General Purpose Unipolar Hall Effect Switch CYD9821B

Applications

- VCD/DVD loader, CD/DVD-Rom
- Cover detector
- Speed Measurement
- Home applications
- Home safety etc.

Features

- 2.5V to 18V operation voltage
- Built-in dynamic offset cancellation
- Small size
- High balance and low thermal drift of magnetic sensing

Order Information

- CYD9821B-PA
  Package(PA): UA or LH or LT

Package Type

P/N: CYD9821B-xx

TO92-3L (UA)

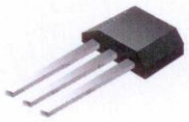

SOT23-3L (LH)

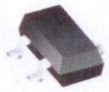

SOT89-3L (LT)

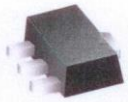

Specifications

Absolute Maximum Ratings (T_A=25°C)

Parameter	Symbol	Conditions	Rating	Unit
Maximum supply voltage	V_{DDMAX}		18	V
Allowable power dissipation	P_D	TO-92(UA)	550*	mW
		SOT-23(LH)	300*	
		SOT-89(LT)	500*	
Operating temperature	T_A		-40~+125	°C
Storage temperature	T_S		-55~+150	°C
Maximum output current	I_{OMAX}		25	mA

* On 50mm x 50 mm x 1.6mm glass epoxy board

Electrical Characteristics (T_A=25°C, V_{DD}=12VDC)

Characteristic	Symbol	Test Condition	Min.	Typ.	Max.	Unit
Supply voltage	V_{DD}		2.5		18	V
Supply voltage	V_{DD}	R_{DD}≥200Ω	2.5		26	V
Supply current through protection device	I_{DD}	R_{DD}≥200Ω			50	mA
Output sink voltage	$V_{DS(ON)}$	@I_{OUT} = 20mA		0.3	0.5	V
Output breakdown voltage	V_{BV}			22	30	V
Supply current	I_{DD}	Output open		6	10	mA

Markt Schwabener Str. 8
85464 Finsing
Germany

Tel.: +49 (0)8121-2574100
Fax: +49 (0)8121-2574101
Email: info@chenyang-gmbh.com
http://www.chenyang-gmbh.com

Magnetic Characteristics (T_A=25°C, V_{DD}=12VDC)

Characteristic	Symbol	Test Condition	Min.	Typ.	Max.	Unit
Operating point	B_{OP}		-120	-105	-90	G
Release point	B_{RP}		-110	-85	-55	G
Hysteresis	B_{HYS}		-35	-20	-10	G

General Specifications

The CYD9821B is designed for magnetic actuating using a unipolar magnetic field. The built-in dynamic offset cancellation of pre-amplifier stage achieves optimal symmetrical magnetic sensing. The supply voltage range is from 2.5V to 18V and the maximum output current is 25mA. This Hall Effect switch IC integrates the sensor, pre-amplifier with dynamic offset cancellation and hysteresis comparator in single chip. The architecture block diagram is shown in Fig. 1.

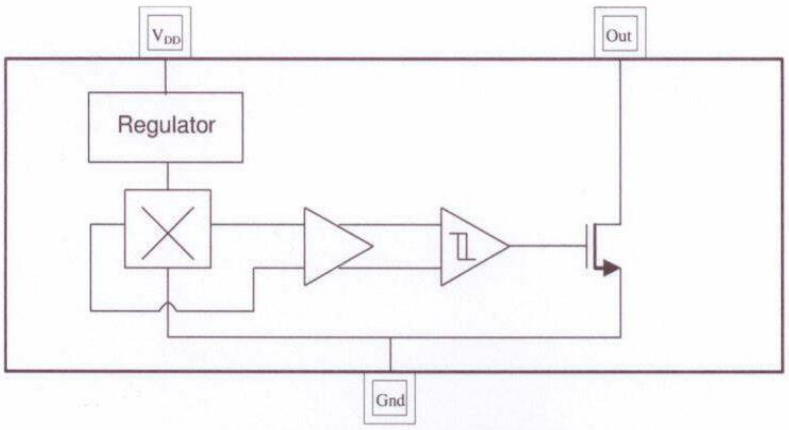

Fig. 1. Functional diagram

Magnetic Flux Density in Gauss

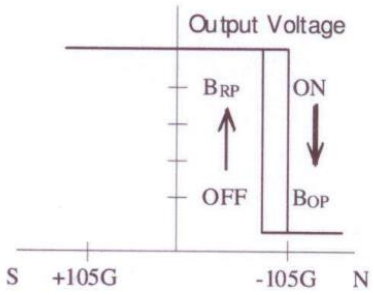

Output sink voltage versus temperature

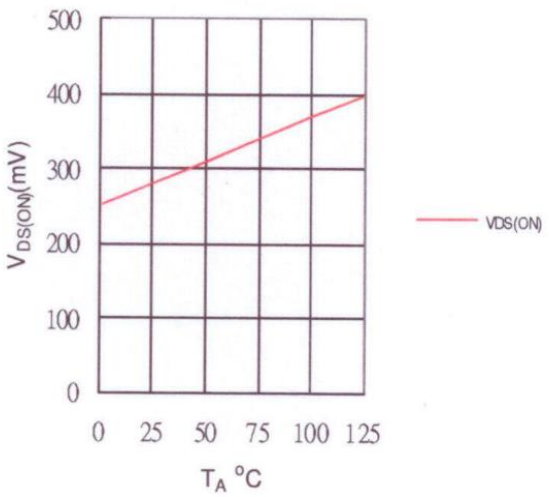

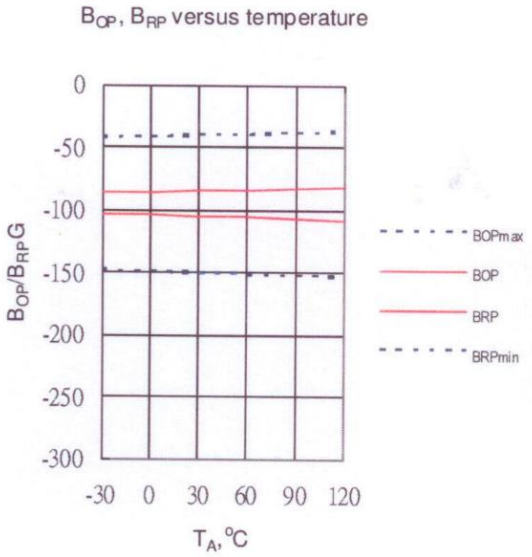

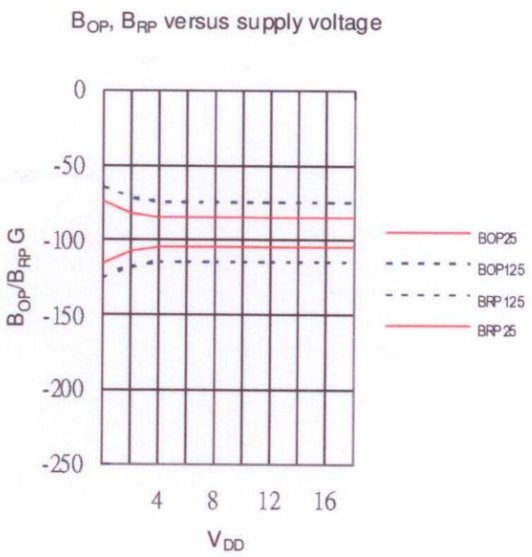

Application Circuit

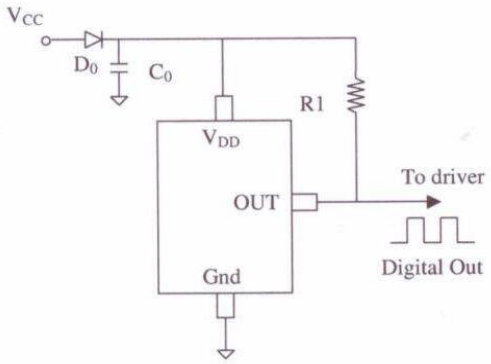

NOTE:

D0: general diode
C0: decoupling capacitor 1µF (recommended)
R1: 1k~10k Ω

Package Outline
TO-92(UA)

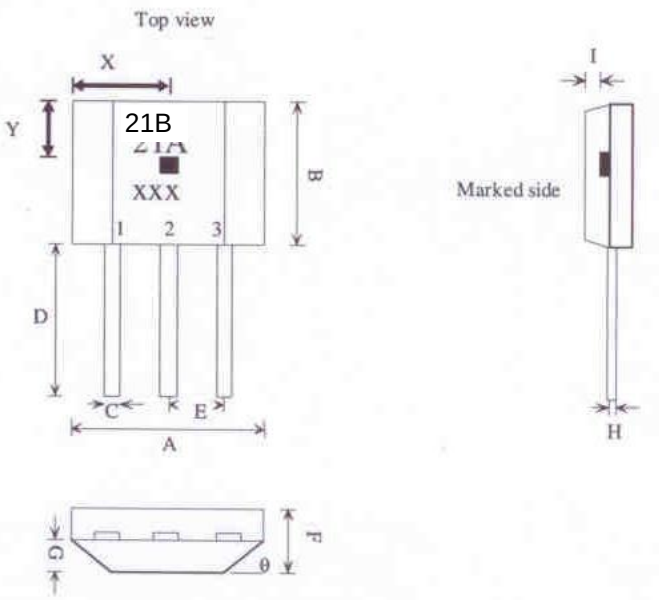

Marking: 21B
Part Number : 21A
Date Code : x(Year) xx(Week)

1. VDD/DC power supply
2. GND/DC ground
3. OUT/output pin

SYMBOLS	DIMENSIONS IN MILLIMETERS(mm)		
	MIN	NOM	MAX
A	3.80	4.00	4.20
B	2.90	3.10	3.30
C	0.38	0.45	0.52
D	15.10	15.30	15.50
E	1.24	1.27	1.30
F	1.45	1.50	1.55
G	0.68	0.73	0.78
H	0.36	0.43	0.50
I	0.41	0.43	0.45
θ		45°	
Sensor Location			
X	1.85	2.0	2.15
Y	0.85	1.0	1.15

Package Outline
SOT-23(LH)

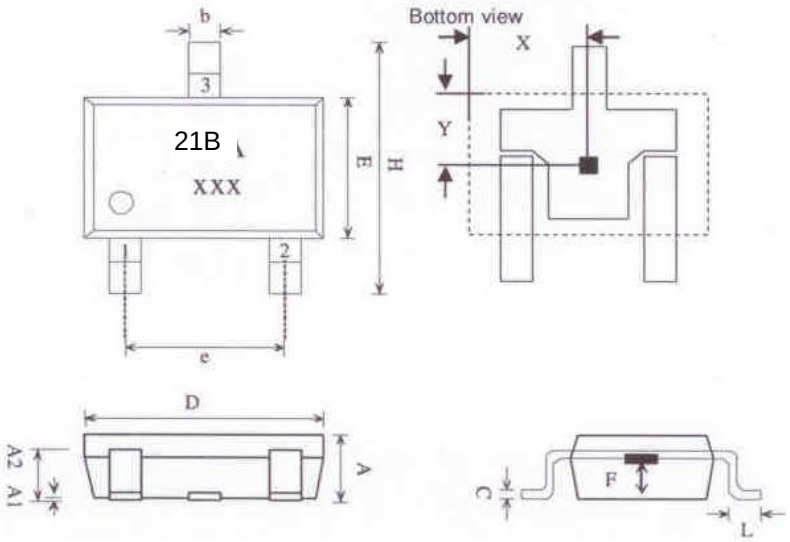

Marking: 21B
Part Number : 21A
Date Code : x(Year) xx(Week)

1. VDD/DC power supply
2. OUT/output pin
3. GND/DC ground

SYMBOLS	DIMENSIONS IN MILLIMETERS(mm)		
	MIN	NOM	MAX
A	1.00	1.10	1.30
A1	0.00	-	0.10
A2	0.70	0.80	0.90
b	0.35	0.40	0.50
C	0.10	0.15	0.25
D	2.70	2.90	3.10
E	1.40	1.80	2.00
F	0.35	0.50	0.65
H	2.60	2.8	3.00
e	1.7	1.9	2.1
L	0.20	-	-
Sensor Location			
X	1.3	1.45	1.6
Y	0.7	0.85	1.0

Package Outline
SOT-89(LT)

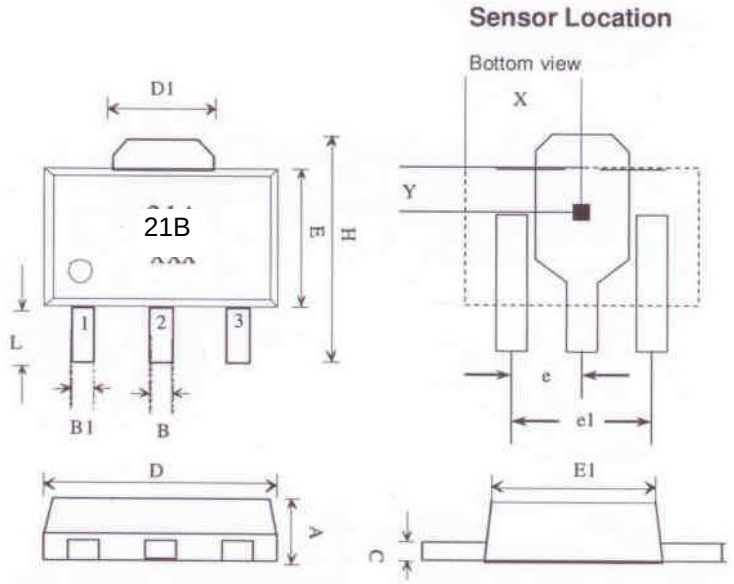

Marking:
Part Numbe 21B
Date Code : x(Year) xx(Week)

1. VDD/DC power supply
2. GND/DC ground
3. OUT/output pin

SYMBOLS	DIMENSIONS IN MILLIMETERS(mm)		
	MIN	NOM	MAX
A	1.40	1.50	1.60
B	0.44	0.50	0.56
B1	0.36	0.42	0.48
C	0.35	0.40	0.44
D	4.40	4.50	4.60
D1	1.52	1.67	1.83
E	2.30	2.45	2.60
E1	2.13	2.21	2.29
e	-	1.50	-
e1	-	3.00	-
H	3.94	4.10	4.25
L	0.89	1.05	1.20
Sensor Location			
X	2.1	2.25	2.4
Y	0.8	0.95	1.1

ChenYang
Technologies GmbH & Co. KG

CYD443H Unipolar HALL-EFFECT SWITCH IC

CYD443H Hall-effect switch integrated circuit for high temperature operating is based on Hall-effect principle and the semiconductor monolithic technology, which includes a voltage regulator, Hall voltage generator, differential amplifier, Schmitt trigger and an open-collector output on a single silicon chip. ICs can convert the input magnetic field signal into digital voltage output.

FEATURES

- Small size
- High Sensitivity
- Quick Response
- High temperature (-40°C ~+150°C)
- Good Temperature Performance
- High Accuracy
- Excellent Reliability

TYPICAL APPLICATION

- Non-contact Switch
- Automotive Ignition
- Brake ICs
- Position control
- Revolution detection
- Automobile Electronics

FUNCTIONAL BLOCK DIAGRAM

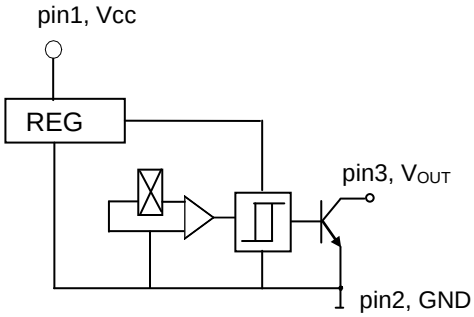

ABSOLUTE MAXIMUM RATINGS

Parameter	Symbol	Value	Unit
Supply Voltage	Vcc	30	V
Quiescent Output Voltage	Vo	30	V
Output Current	Io	50	mA
Operating Temperature Range	T_A	-40 ~ +150	°C
Storage Temperature Range	T_S	-55 ~ +150	°C

Magnetic-Electrical Transfer Characteristics

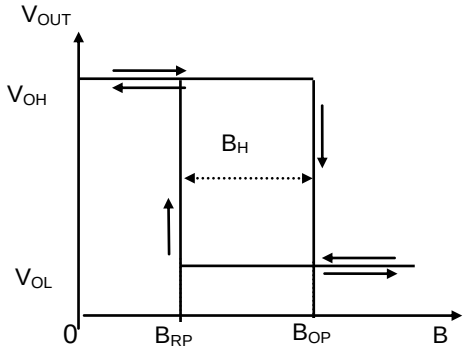

ELECTRICAL CHARACTERISTICS

Parameter	Test Condition	Symbol	Value			Unit
			Min	Typ	Max	
Supply Voltage	Vcc=4.0V ~ 30V	V_{CC}	4.0	-	30	V
Output Low Voltage	Vcc=4.5v, Vo=24V Io=20mA, $B \geq B_{OP}$	V_{OL}	-	0.2	0.4	V
Output Leakage Current	Vo=24V, $B < B_{RP}$	I_{OH}	-	<1.0	10	µA
Supply Current	Vcc=24V, Vo open-collector output	Icc	-	5.0	-	mA
Output Rise time	Vcc=12V, R_L=820Ω C_L=20pF	tr	-	0.2	2.0	µS
Output Fall time		tf	-	0.18	2.0	µS

Markt Schwabener Str. 8
85464 Finsing
Germany

Tel.: +49 (0)8121-2574100
Fax: +49 (0)8121-2574101
Email: info@chenyang-gmbh.com
http://www.chenyang-gmbh.com

Magnetic Characteristics

Parameter		Min (mT)	Typ (mT)	Max (mT)
Operate Point (B_{OP})	T_A=25°C	5.0	7.0	10.0
	Full Operating Temperature Range	3.0	7.5	10.5
Release Point (B_{RP})	T_A=25°C	2.0	4.5	7.0
	Full Operating Temperature Range	2.0	4.5	7.5
Hysteresis (B_H)	T_A=25°C	-	3.0	-
	Full Operating Temperature Range	-	3.0	-

Package Outline Drawing (Unit: mm)

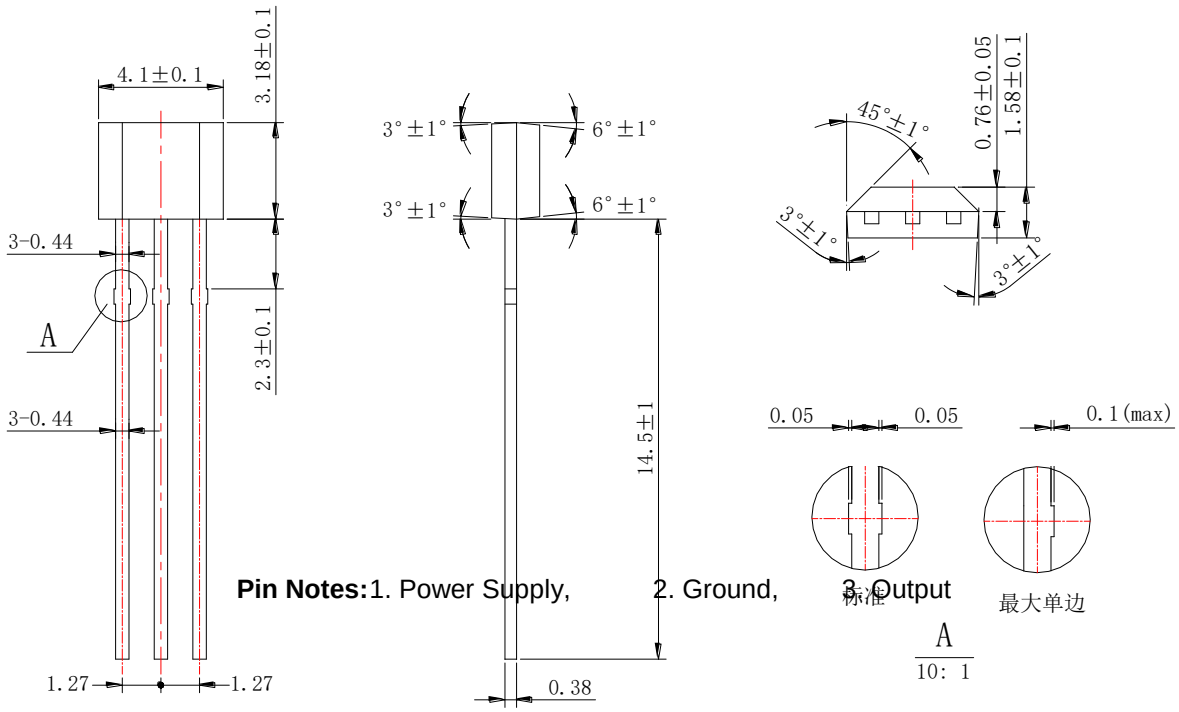

Pin Notes: 1. Power Supply, 2. Ground, 3. Output

Connection

This sensor has an OC (NPN) output voltage. Therefore it is necessary to connect a pull-up resistor in value from 1kΩ to 10kΩ between the power supply Vcc and output pins.

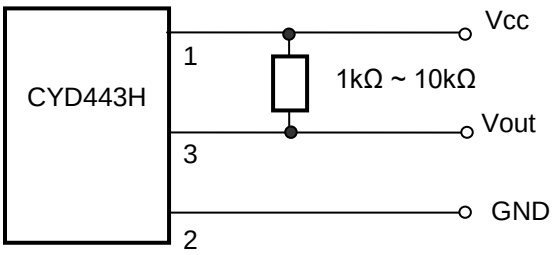

Markt Schwabener Str. 8
85464 Finsing
Germany

Tel.: +49 (0)8121-2574100
Fax: +49 (0)8121-2574101
Email: info@chenyang-gmbh.com
http://www.chenyang-gmbh.com

Cautions:

1) It is possible that outside mechanical stress affects the operating point and the release point of Hall-effect circuit, therefore, mechanical stress should be lessened as far as possible in the process of assembly;
2) Pay attention to the soldering temperature (<260°C) at the leads; keep it lower in a short time (<3s) to guarantee good soldering quality.

.

Markt Schwabener Str. 8
85464 Finsing
Germany

Tel.: +49 (0)8121-2574100
Fax: +49 (0)8121-2574101
Email: info@chenyang-gmbh.com
http://www.chenyang-gmbh.com

CYD3141E and CYD3144E HALL-EFFECT SWITCH IC

CYD3141E and CYD3144E Hall-effect switch integrated circuits is based on the semiconductor monolithic technology, which includes a voltage regulator, Hall voltage generator, differential amplifier, Schmitt trigger and an open-collector output on a single silicon chip. ICs can convert the input magnetic field signal into digital voltage output.

FEATURES

- Small size
- High Sensitivity
- Quick Response
- Good Temperature Performance
- High Accuracy
- Excellent Reliability

TYPICAL APPLICATION

- Non-contact Switch
- Automotive Ignition
- Brake ICs
- Position control
- Revolution detection
- Safe alarm device

FUNCTIONAL BLOCK DIAGRAM

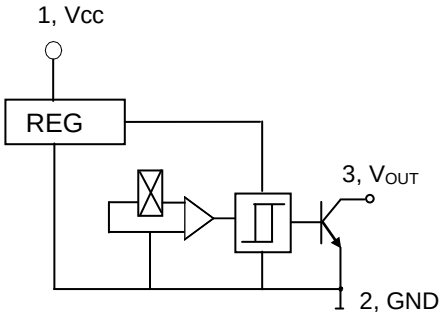

ABSOLUTE MAXIMUM RATINGS

Parameter	Symbol	Value	Unit
Supply Voltage	Vcc	28	V
Quiescent Output Voltage	Vo	28	V
Output Current	Io	25	mA
Operating Temperature Range	T_A	-40 ~ +85	°C
Storage Temperature Range	T_S	-65 ~ +150	°C

Magnetic-Electrical Transfer Characteristics

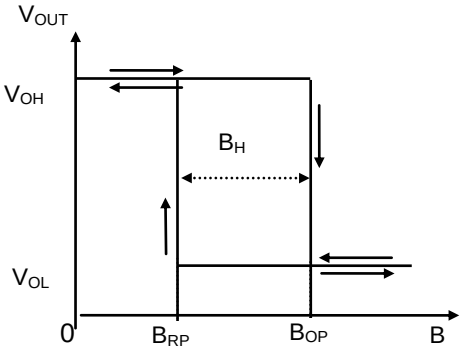

ELECTRICAL CHARACTERISTICS

Parameter	Test Condition	Symbol	Value			Unit
			Min	Typ	Max	
Supply Voltage	Vcc=4.5V ~ 24V	V_{CC}	4.5	-	24	V
Output Low Voltage	Vcc=4.5v, Vo=24V Io=20mA, $B \geq B_{OP}$	V_{OL}	-	175	400	mV
Output Leakage Current	Vo=24V, $B < B_{RP}$	I_{OH}	-	<1.0	10	µA
Supply Current	Vcc=24V, Vo open-collector output	Icc	-	3.0	9.0	mA
Output Rise time	Vcc=12V, R_L=820Ω C_L=20pF	tr	-	0.2	2.0	µS
Output Fall time		tf	-	0.18	2.0	µS

Markt Schwabener Str. 8
85464 Finsing
Germany

Tel.: +49 (0)8121-2574100
Fax: +49 (0)8121-2574101
Email: info@chenyang-gmbh.com
http://www.chenyang-gmbh.com

Magnetic Characteristics

Parameter		CYD3141E		
		Min (mT)	Typ (mT)	Max (mT)
Operate Point (B_{OP})	T_A=25°C	5.0	10.0	16.0
	Full Operating Temperature Range	3.0	10.0	17.5
Release Point (B_{RP})	T_A=25°C	1.0	4.5	13.0
	Full Operating Temperature Range	1.0	4.5	14.5
Hysteresis (B_H)	T_A=25°C	2.0	5.5	8.0
	Full Operating Temperature Range	2.0	5.5	8.0

Parameter	Symbol	CYD3144EH			CY3144E		
		Min (mT)	Typ (mT)	Max (mT)	Min (mT)	Typ (mT)	Max (mT)
Operate Point	B_{OP}	5.0	10.0	16.0	10.0	15	20.0
Release Point	B_{RP}	1.0	4.5	13.0	4.0	8.5	14.0
Hysteresis	B_H	2.0	5.5	8.0	-	6.5	-

-

Package Outline Drawing (Unit: mm)

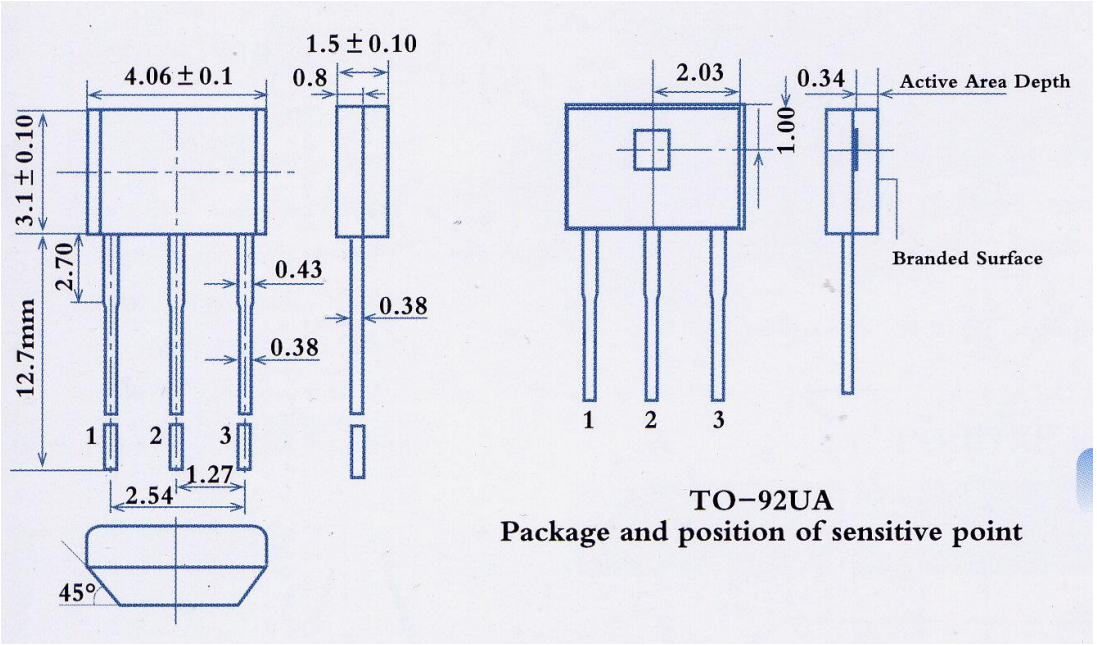

Pin Notes: 1. Power Supply, 2. Ground, 3. Output

Connection

This sensor has an OC (NPN) output voltage. Therefore it is necessary to connect a pull-up resistor in value from 1kΩ to 10kΩ between the power supply Vcc and output pins.

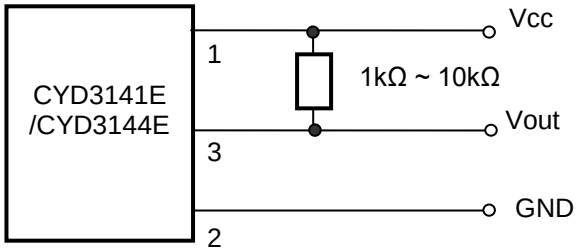

Cautions:

1) It is possible that outside mechanical stress affects the operating point and the release point of Hall-effect circuit, therefore, mechanical stress should be lessened as far as possible in the process of assembly;
2) Pay attention to the soldering temperature at the leads; keep it lower in a short time to guarantee good soldering quality.

Markt Schwabener Str. 8
85464 Finsing
Germany

Tel.: +49 (0)8121-2574100
Fax: +49 (0)8121-2574101
Email: info@chenyang-gmbh.com
http://www.chenyang-gmbh.com

CYD543 Hall Effect Unipolar IC Switches

These Hall-effect switches are monolithic integrated circuit consisting of a voltage regulator, Hall-voltage generator, differential amplifier, Schmitt trigger, temperature compensation circuit and open-collector output stage. Its input is a magnetic flux density signal and output is a digital voltage signal.

FEATURES

- Wide supply voltage range
- Fast response time
- Wide frequency and temperature range
- Long operating life
- Small size, convenient installing
- Output compatible with all digital logic families
- Unipolar Sensor
- **ROHS Compliant**

TYPICAL APPLICATIONS

- Contact-less switch
- Position control
- Speed measurement
- Revolution detection
- Isolation measurement
- Brushless dc motor
- Automotive igniters

ABSOLUTE MAXIMUM RATING

Parameter	Symbol	Value	Unit
Supply voltage	V_{CC}	24	V
Magnetic flux density	B	Unlimited	mT
Output OFF voltage	V_{ce}	50	mV
Continuous output current	I_{OL}	50	mA
Operating temperature range	T_A	-50~150	°C
Storage temperature range	T_S	-55~150	°C

ELECTRICAL CHARACTERISTICS T_A=25°C

Parameter	Symbol	Test conditions	Type and Value			Unit
			min	type	max	
Supply voltage	V_{CC}		4.5	-	24	V
Output saturation voltage	V_{OL}	Iout=20mA B>B_{OP}	-	200	400	mV
Output leakage current	I_{OH}	Vout=24V B<B_{RP}	-	0.1	10	µA
Supply current	I_{CC}	V_{CC}=Output open	-	-	10	mA
Output rise time	t_r	R_L=820Ω C_L=20PF	-	0.12	-	µS
Output fall time	t_f	R_L=820Ω C_L=20PF	-	0.18	-	µS

Markt Schwabener Str. 8
85464 Finsing
Germany

Tel.: +49 (0)8121-2574100
Fax: +49 (0)8121-2574101
Email: info@chenyang-gmbh.com
http://www.chenyang-gmbh.com

MAGNET CHARACTERISTICS

V_{CC}=4.5 ~ 24V

Paramenter	Symbol	Min.	Typical	Max.	Unit
Operate point	B_{OP}		15	20	mT
Release point	B_{RP}	3	10		mT
Hysteresis	B_H		5	-	mT

NOTE: 1mT=10GS

BLOCK DIAGRAM

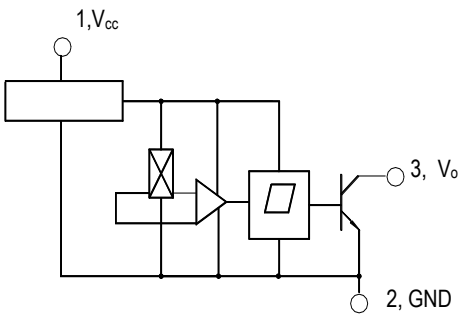

Magnetic-electrical transfer characteristics

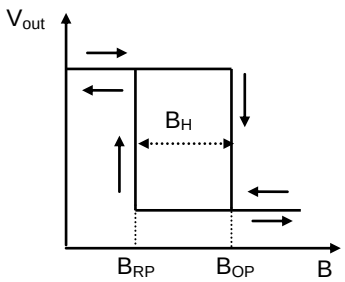

Connection

This sensor has an OC (NPN) output voltage. Therefore it is necessary to connect a pull-up resistor in value from 1kΩ to 10kΩ between the power supply Vcc and output pins.

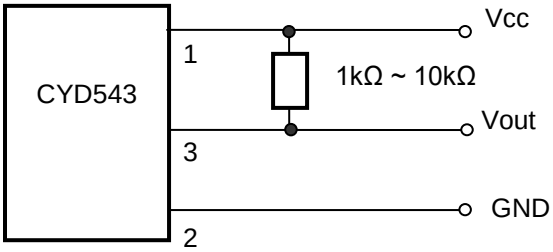

Markt Schwabener Str. 8
85464 Finsing
Germany

Tel.: +49 (0)8121-2574100
Fax: +49 (0)8121-2574101
Email: info@chenyang-gmbh.com
http://www.chenyang-gmbh.com

DIMENSIONS (in mm)

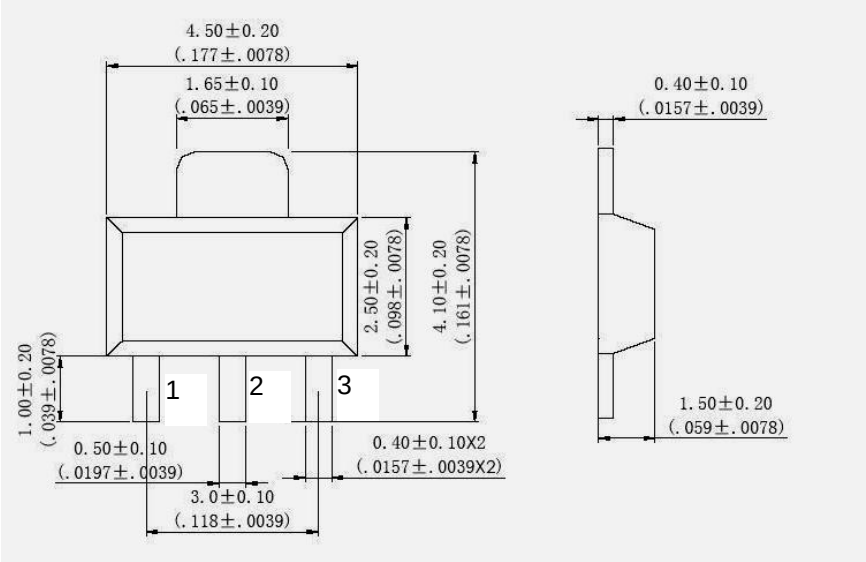

Cautions

1. When install, should as full as possible decrease the mechanical stress acting on the Hall IC, to avoid the influence of the operate point and release point.
2. On the premise of ensuring welding quality, use as possible as low welding temperature an short time.

SOT-89 PACKAGE 1. Supply Voltage 2. GND 3. Output

Markt Schwabener Str. 8
85464 Finsing
Germany

Tel.: +49 (0)8121-2574100
Fax: +49 (0)8121-2574101
Email: info@chenyang-gmbh.com
http://www.chenyang-gmbh.com

CYD1102G Unipolar Hall Effect Switch ICs

The CYD1102G is an integrated Hall effect latched sensor designed for electronic commutation of brush-less DC motor applications. The device includes an on-chip Hall voltage generator for magnetic sensing, a comparator that amplifies the Hall voltage, and a Schmitt trigger to provide switching hysteresis for noise rejection, and open-collector output. An internal band gap regulator is used to provide temperature compensated supply voltage for internal circuits and allows a wide operating supply range.
A north pole of sufficient strength will turn the output ON. In the absence of a magnetic field, the output is OFF.

Features

◆ Wide operating voltage range 3V to 28V	◆ Reverse polarity protection
◆ Maximum output sink current 50mA	◆ Package : SIP-3L
◆ Open collector pre-driver	

Block Diagram

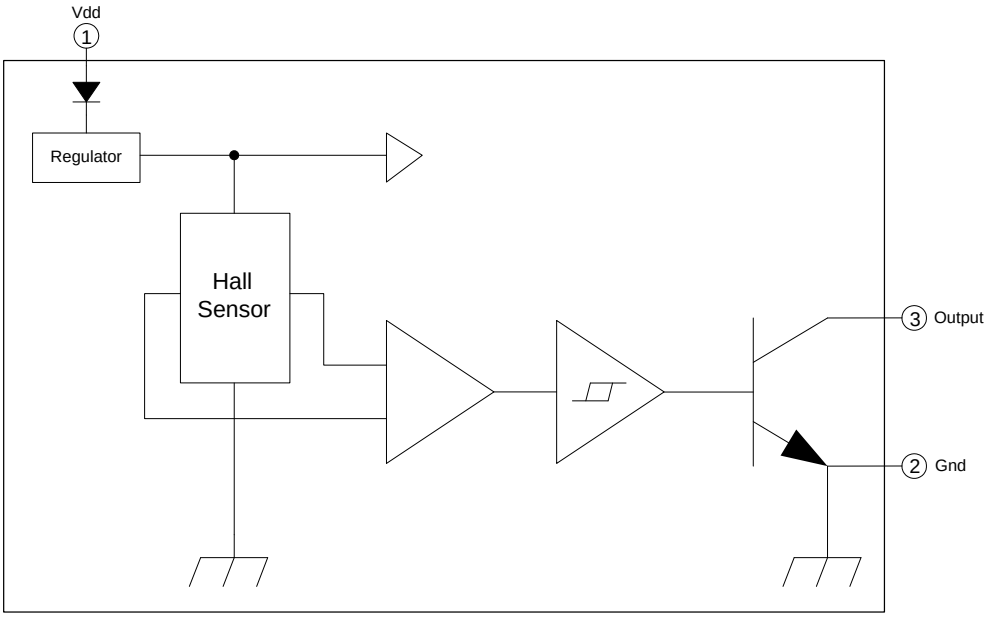

Figure.1

Recommended Operating Conditions

Parameter	Symbol	Conditions	Values			Unit
			Min.	Typ.	Max.	
Supply Voltage	V_{DD}	-	3.0		28	V
Operating Temperature Range	T_A	-	-40		150	℃

Markt Schwabener Str. 8
85464 Finsing
Germany

Tel.: +49 (0)8121-2574100
Fax: +49 (0)8121-2574101
Email: info@chenyang-gmbh.com
http://www.chenyang-gmbh.com

Absolute Maximum Ratings

Parameter	Symbol	Conditions	Values			Unit
			Min.	Typ.	Max.	
Operating Temperature	T_{OP}	-	-40		150	℃
Storage Temperature	T_{ST}	-	-65		150	℃
DC Supply Voltage	V_{DD}	-	3.0		28	V
Supply Current	I_{DD}	-			10	mA
Continuous Current	$I_{O(CONT)}$				50	mA
Junction temperature	T_J				160	℃
Power Dissipation	P_D	SIP-3L			500	mW
Thermal Resistance	θ_{JC}	SIP-3L		0.27		℃/mW
Lead Temperature		10sec			260	℃

Electrical Characteristics VDD=12.0V, TA=25℃ (unless otherwise specified)

Parameter	Symbol	Conditions	Values			Unit
			Min.	Typ.	Max.	
Average Supply Current(no load)	I_{DD}	-		3.5	10	mA
Output Saturation Voltage	V_{SAT}	Iout= 20mA		165	200	mV
Output Rise time	t_r	RL=500Ω, CL=20pF(Figure 7)	0.2	-	0.75	µs
Output Fall time	t_f	RL=500Ω, CL=20pF(Figure 7)	20	-	150	ns

Magnetic Characteristics

Parameter	Symbol	Conditions	Values			Unit
			Min.	Typ.	Max.	
Operate Points	B_{OP}		+140	-	-	G
Release Points	B_{RP}		-	-	+60	G
Hysteresis	B_{HYST}		30	-	120	G

Hysteresis Characteristics

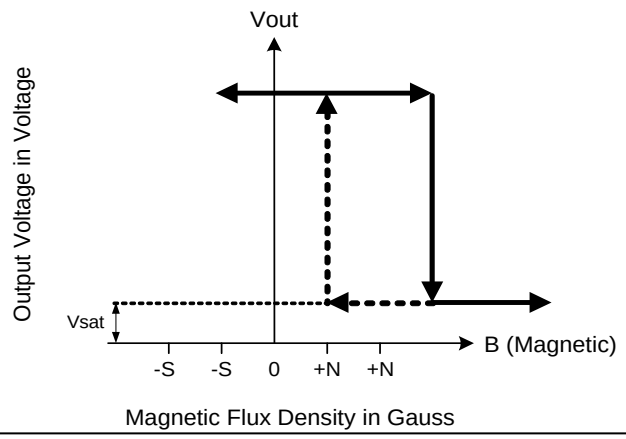

Figure.2

Markt Schwabener Str. 8
85464 Finsing
Germany

Tel.: +49 (0)8121-2574100
Fax: +49 (0)8121-2574101
Email: info@chenyang-gmbh.com
http://www.chenyang-gmbh.com

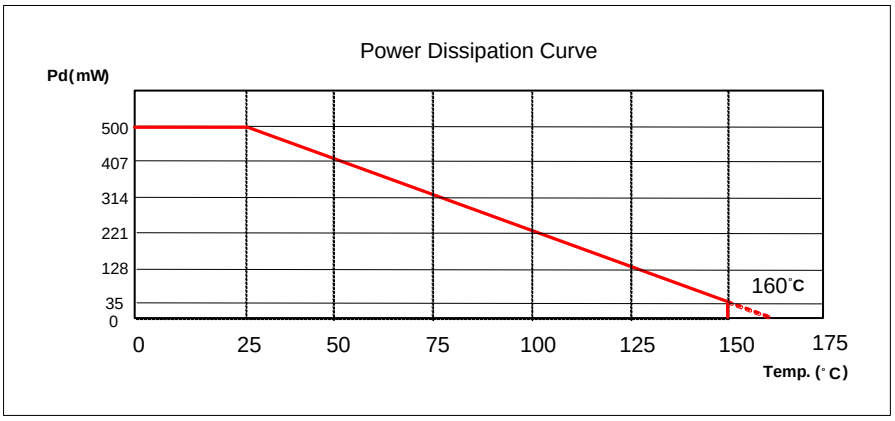

Figure.3

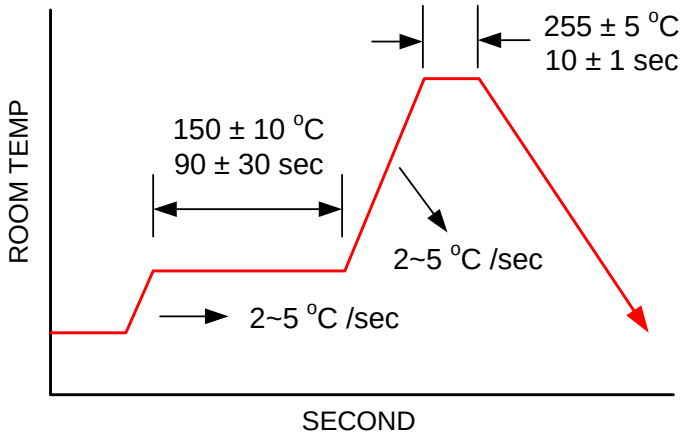

Soldering Condition

Figure.4

Pin Connection

[Top View]

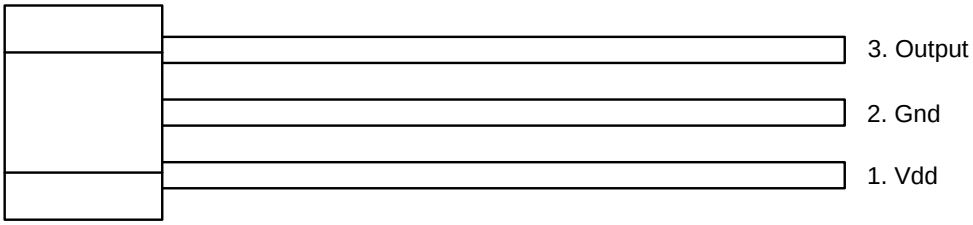

Figure.5

Pin Description

Name	I/O	Pin No.	Description
Vdd	P	1	Positive power supply
Gnd	G	2	Ground
Output	O	3	Driver output

Legend: I=input, O=output, I/O=input/output, P=power supply, G=ground

Marking Information

[Top View]

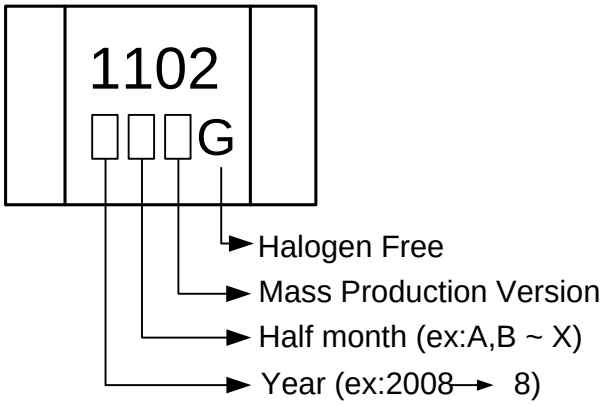

Figure.6

Order Information

Part Number	Operating Temperature	Package	MOQ
CYD1102G	-40 ℃ to +150 ℃	SIP-3L	1000ea

Markt Schwabener Str. 8
85464 Finsing
Germany

Tel.: +49 (0)8121-2574100
Fax: +49 (0)8121-2574101
Email: info@chenyang-gmbh.com
http://www.chenyang-gmbh.com

Package Dimension (Unit: mm)

SIP-3L(Halogen Free)

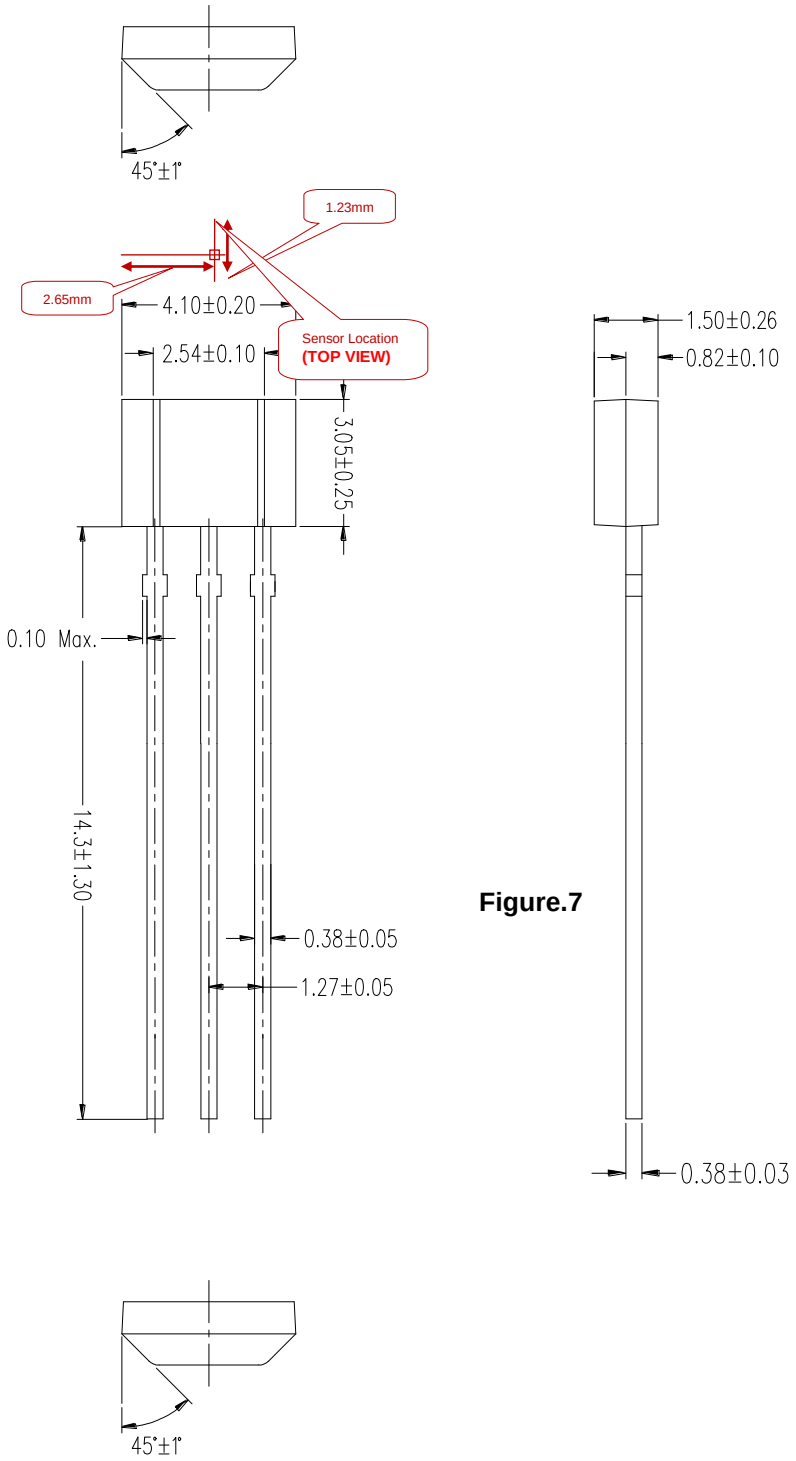

Figure.7

Test Circuit

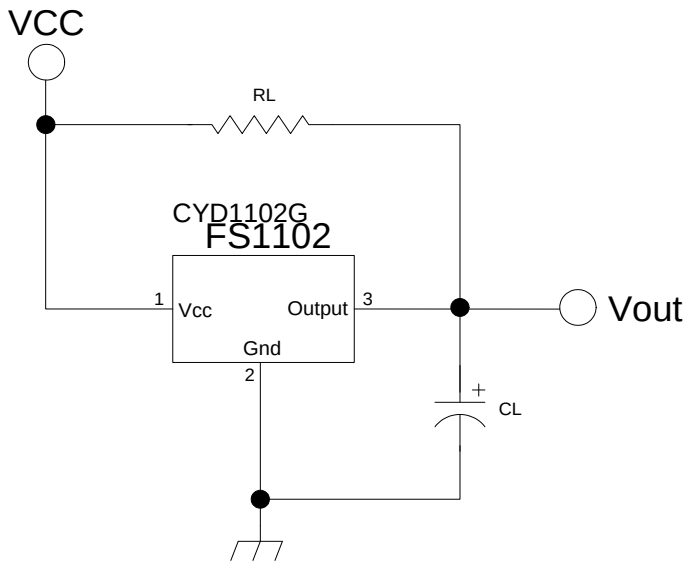

Figure.8

Functional Application Circuit

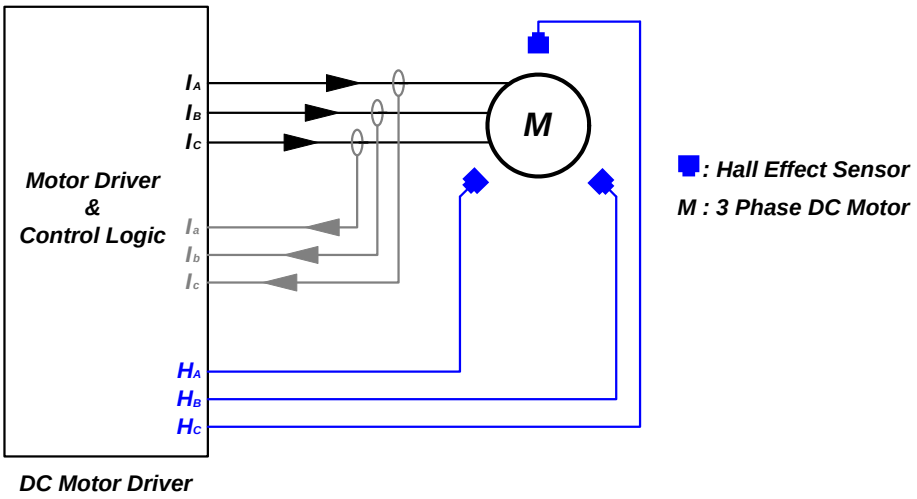

Figure.9

Omni-polar Hall Effect Switch ICs

CYD3661-BC Micropower Ultra-Sensitivity Hall Effect Sensors

(Omni-polar)

The CYD3661-BC is ultra-sensitive, pole independent Hall-Effect switches with a latched digital output. It is very suitable for operation in battery-operated, hand-held equipment such as cellular and cordless phone, PDA, pagers palmtop computers. The built-in dynamic offset cancellation of pre-amplifier stage achieves optimal symmetrical magnetic sensing. The supply voltage range is from 2.4V to 6.0V and the max output current is 5mA。

Unlike other Hall-effect switches, either a north or south pole of sufficient strength will turn the output on. In the absence of a magnetic field, the output is off. The polarity independence and minimal power requirement allows this device to easily replace reed switches for superior reliability.

APPLICATIONS

- Cover detector
- Battery-operated
- Hand-held equipment
- Door sensors

FEATURES

- Micro-power operation (5-7µW), **Omni-polar**
- 2.4V to 6.0V power supply
- Built-in dynamic offset cancellation
- Thin SOT package
- ESD protected to 5KV
- High balance and low thermal drift magnetic sensing
- **ROHS compliant**

ABSOLUTE MAX. RATINGS (T_A=25°C)

Parameter	Symbol	Condition	Value	Units
Supply voltage	$V_{DD(MAX)}$		7	V
Allowable power dissipation	Pd	SOT23	300*	mW
Storage temperature	T_S		-55 ~ +150	°C
Operating temperature	Ta		-40 ~ +85	°C
Output current	I_{out}		5	mA

* On 50mm x 50mm x 1.6mm glass epoxy board

ELECTRICAL CHARACTERISTICS T_A=25°C, V_{DD}=3.0V

Parameter	Symbol	Test condition	Value			Units
			Min.	Typ.	Max..	
Supply voltage	V_{DD}		2.4	3.0	6.0	V
Output sink voltage	V_{DS}	I_{out}=1mA, V_{DD}=3.0V	-	0.1	0.25	V
Supply current	I_{AWK}	Awake, V_{DD}=3.0V	-	3	5	mA
	I_{SLP}	Sleep, V_{DD}=3.0V		2	4	µA
	I_{AVG}	V_{DD}=3.0V		5	9	µA
Awake time	T_{AWK}	Operating		45	90	µS
Period	T_P	Operating		90	180	mS
Duty cycle				0.05		%

Markt Schwabener Str. 8
85464 Finsing
Germany

Tel.: +49 (0)8121-2574100
Fax: +49 (0)8121-2574101
Email: info@chenyang-gmbh.com
http://www.chenyang-gmbh.com

Magnetic Characteristics T_A=25°C, V_{DD}=3.0V

Parameter	Symbol	Test Condition	Min.	Typ.	Max.	Units
Operation Point	B_{OP}	S pole	18		47	GS
Release Point	B_{RP}	S pole	14		43	
Operation Point	B_{ON}	N pole	-35		-55	
Release Point	B_{RN}	N pole	-27		-46	GS
Hysteresis	B_H	$\lvert B_{OP} - B_{RN} \rvert$		6		GS

BLOCK DIAGRAM

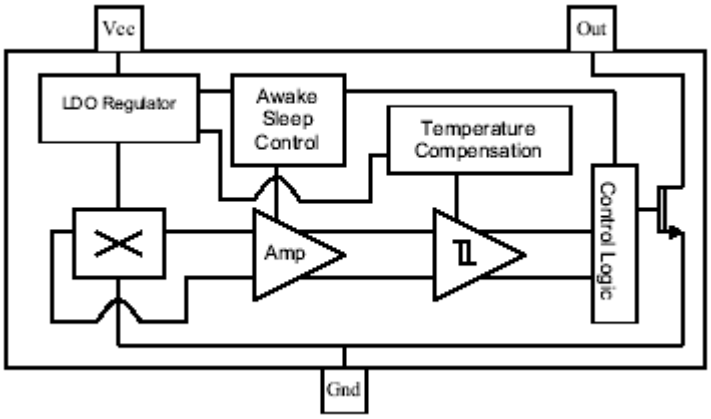

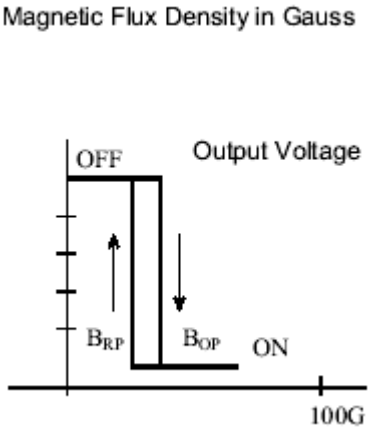

The micro power operation is realised by an awake/sleep timing control as shown in the following figure. Internal timing circuitry activates the sensor for 45µs and deactivates it for the remainder of the period (90ms). A short awake time allows for stabilization prior to the sensor sampling and data latching on the falling edge of the timing pulse. The output during the sleep time is latched in the last sampled state. The supply current is not affected by the output state.

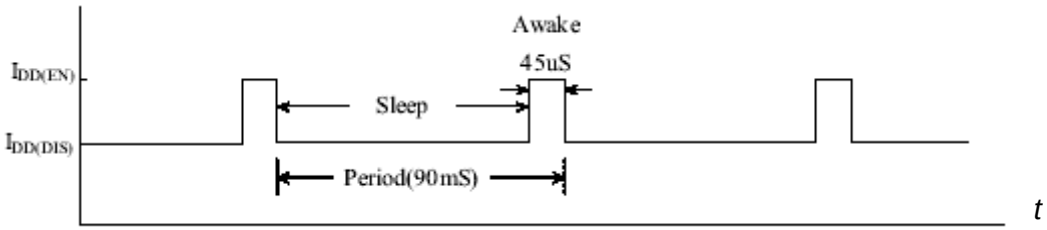

Output sink voltage versus temperature

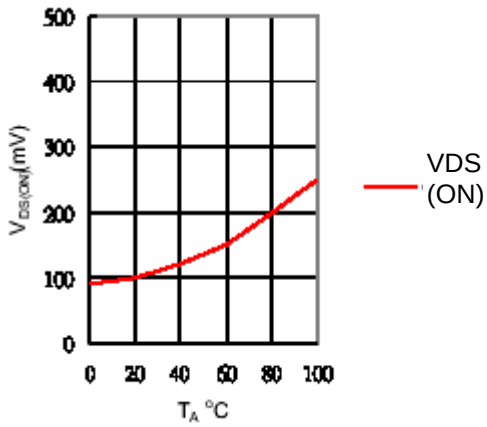

B_{OP}, B_{RP} Versus Temperature

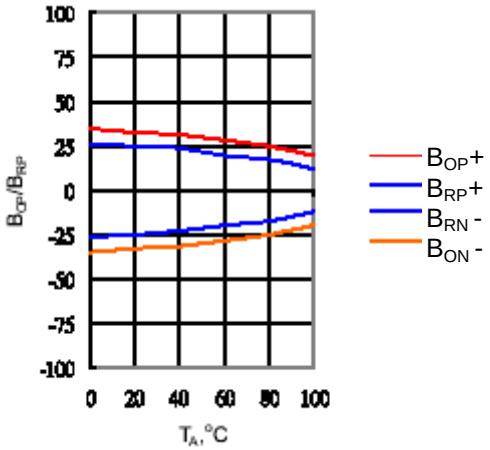

Markt Schwabener Str. 8
85464 Finsing
Germany

Tel.: +49 (0)8121-2574100
Fax: +49 (0)8121-2574101
Email: info@chenyang-gmbh.com
http://www.chenyang-gmbh.com

Package Outline

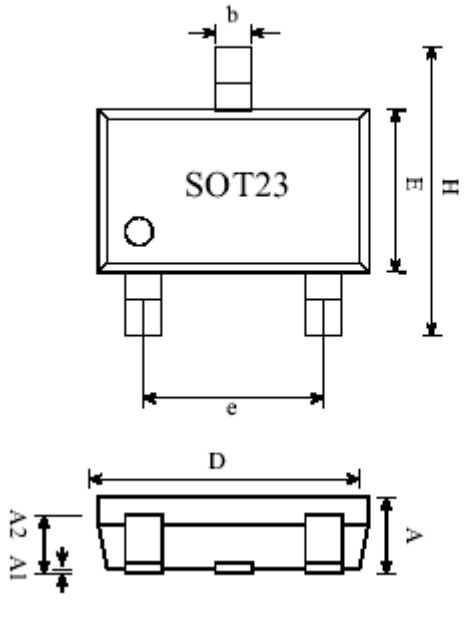

Sensor Location

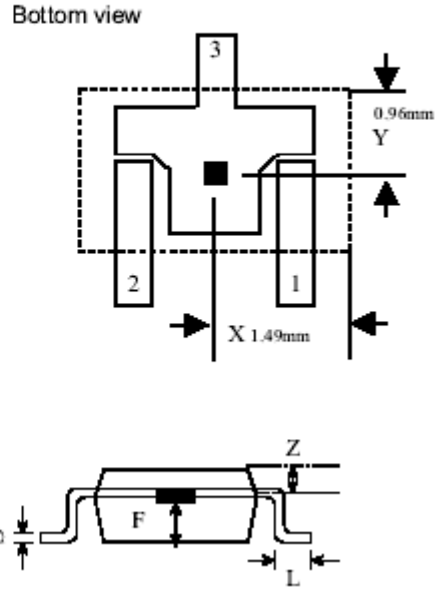

SYMBOLS	DIMENSIONS IN MILLIMETERS(mm)		
	MIN	NOM	MAX
A	1.00	1.10	1.30
A1	0.00	-	0.10
A2	0.70	0.80	0.90
b	0.35	0.40	0.50
C	0.10	0.15	0.25
D	2.70	2.90	3.10
E	1.60	1.80	2.00
F	0.55	0.60	0.65
H	2.60	2.8	3.00
e	1.7	1.9	2.1
L	0.20	-	-
SENSOR LOCATION			
X	-	0.96	-
Y	-	1.49	-
Z	-	0.50	-

SOT-23

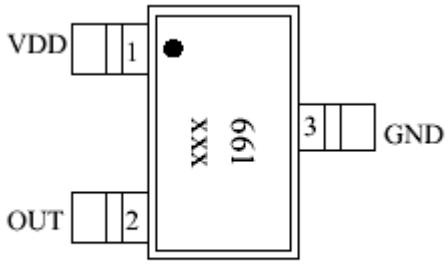

XXX: Date Code

Pin Description

Name	Pin	Description
VDD	1	DC power supply
OUT	2	Output pin
GND	3	DC ground

Markt Schwabener Str. 8
85464 Finsing
Germany

Tel.: +49 (0)8121-2574100
Fax: +49 (0)8121-2574101
Email: info@chenyang-gmbh.com
http://www.chenyang-gmbh.com

APPLICATION CIRCUITS

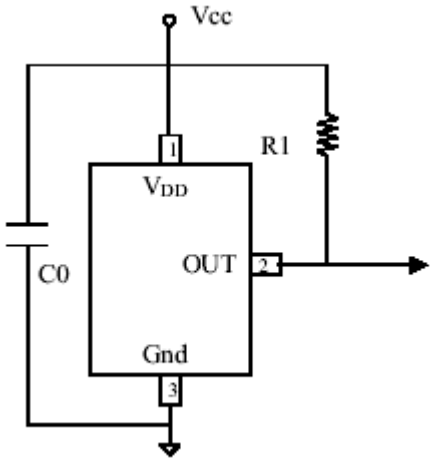

Solder-Pad Layout

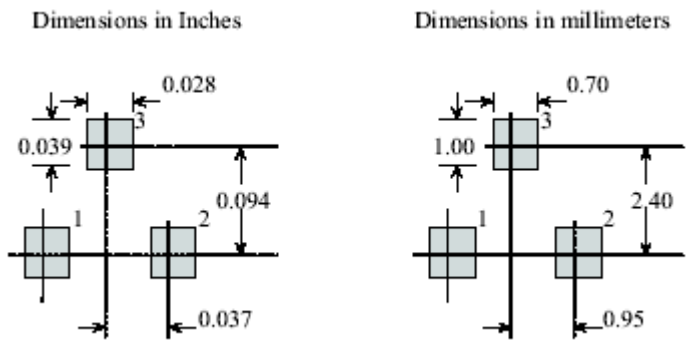

NOTE:

C0: 0.1µF decoupling capacitor
R1: >470 kΩ is recommended

Magnetization direction

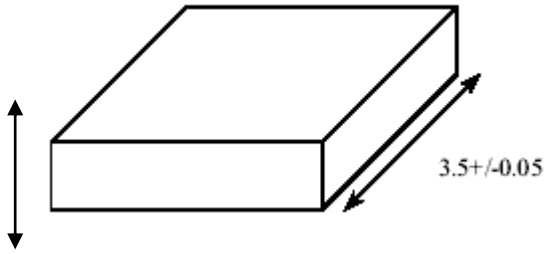

Magnet Characteristic

Dimensions (mm)

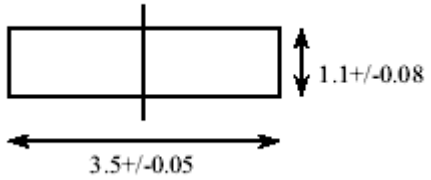

Recommended Sensing Location

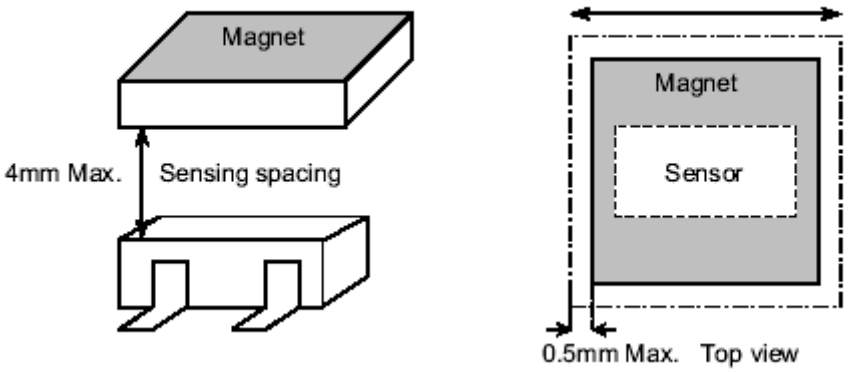

Ordering Information

Part no.	Mark	Package/Packing	Temperature range
CYD3661-BC	661	SOT-23 / 3000units/reel	-40°C ~ +85°C

Markt Schwabener Str. 8
85464 Finsing
Germany

Tel.: +49 (0)8121-2574100
Fax: +49 (0)8121-2574101
Email: info@chenyang-gmbh.com
http://www.chenyang-gmbh.com

CYD2462 High Sensitivity Omnipolar Hall Effect Switch

The CYD2462 family, produced with BiCMOS technology, is a chopper-stabilized Hall Effect Sensor that offers a magnetic sensing solution with superior sensitivity stability over temperature and integrated protection features. Superior high-temperature performance is made possible through dynamic offset cancellation, which reduces the residual offset voltage normally caused by device over moulding, temperature dependencies, and thermal stress. Each device includes on a single silicon chip a voltage regulator, Hall-voltage generator, small-signal amplifier, chopper stabilization, Schmitt trigger, and an open-drain output to sink up to 20mA. An on board regulator permits with supply voltages of 2.5 to 24V which makes the device suitable for a wide range of industrial and automotive applications. The CYD2462 is available in a 3-pin SIP and a plastic SOT23-3 surface mount package. Both packages are lead (Pb) free, with 100% matte tin lead frame plating.

APPLICATIONS

- Flow meters
- Magnetic encoding
- Proximity sensing
- Garage door openers
- Power sliding doors
- Sunroofs motor

FEATURES

- High chopping frequency
- 2.5V to 24V power supply
- Superior temperature stability
- Reverse battery protection (up to 28V)
- Over-voltage protection at all pins
- Robust EMC performance
- **ROHS compliant**

ABSOLUTE MAX. RATINGS over operating free-air temperature range (unless otherwise noted) (1)

Parameter	Symbol	Min.	Max.	Units
Supply voltage	V_{DD}	-28(2)	28	V
Output terminal voltage	V_{OUT}	-0.5	28	V
Output terminal current sink	I_{SINK}	0	30	mA
Operating temperature	Ta	-40	150	°C
Maximum junction temperature	T_J	-55	165	°C
Storage temperature	T_{STG}	.-65	175	°C

(1) Stresses above those listed here may cause permanent damage to the device. Exposure to absolute maximum rating conditions for extended periods may affect device reliability.
(2) Ensured by design.

ESD Protection *Human Body Model (HBM) tests according to: standard AEC-Q100-002*

Parameter	**Symbol**	**Min.**	**Max,**	**Unit**
ESD-Protection	V_{ESD}	-4	4	kV

Thermal Characteristics

Symbol	Parameter	Test conditions	Rating	Unit
$R_{\theta JA}$	UA Package thermal resistance	Single-layer PCB, with copper limited to solder pads	166	°C/W
$R_{\theta JA}$	LH Package thermal resistance		228	°C/W

Markt Schwabener Str. 8
85464 Finsing
Germany

Tel.: +49 (0)8121-2574100
Fax: +49 (0)8121-2574101
Email: info@chenyang-gmbh.com
http://www.chenyang-gmbh.com

ELECTRICAL CHARACTERISTICS T_A=25°C, V_{DD}=5.0V

Parameter	Symbol	Test condition	Value			Units
			Min.	Typ.	Max..	
Supply voltage	V_{DD}	$T_J < T_{J(Max.)}$	2.5	--	24	V
Reverse supply voltage	V_{DDR}		-28	--	--	V
Operating supply current	I_{DD}	V_{DD}=2.5 to 24V, T_A=25°C	0.8	1.6	2.0	mA
		V_{DD}=2.5 to 24V, T_A=125°C	0.8	1.7	2.0	µA
Power-on time	T_{ON}		--	35	50	µs
Off-state leakage current	I_{OL}	Output Hi-Z	--	--	1	µA
FET on-resistance	$R_{DS(on)}$	V_{DD}=5V, I_O=10mA, T_A=25°C	--	20	--	Ω
		V_{DD}=5V, I_O=10mA, T_A=125°C	--	30	--	Ω
Output delay time	t_D	B=B_{RP} to B_{OP}	--	15	25	µs
Output rise time (10% to 90%)	t_R	R1=1kΩ Co=50pF	--	--	0.5	µs
Output fall time (90% to 10%)	t_F	R1=1kΩ Co=50pF	--	--	0.2	µs
Frequency Bandwidth	f_{BW}		20	--	--	kHz

.

Magnetic Characteristics

over operating free-air temperature range (unless otherwise noted)

Parameter	Symbol	Test Condition	Min.	Typ.	Max.	Units
Operation Point	B_{OP}	TA=-40°C~125°C	1.5	2.5	3.5	mT
Release Point	B_{RP}		1.0	1.5	3.0	mT
Hysteresis	B_H		--	1.0	--	mT

1mT=10Gs
Magnetic flux density, B, is indicated as a negative value for North-polarity magnetic fields, and as a positive value for South-polarity magnetic fields

Functional Block Diagram

The CYD2462 device is a chopper-stabilized Hall sensor with a digital latched output for magnetic sensing applications. The device can be powered with a supply voltage between 2.5 and 24V, and continuously survives -28V reverse-battery conditions. The device does not operate when voltage supply -28 to 2.2V is applied to the V_{DD} terminal (with respect to the GND terminal). In addition, the device can withstand voltages up to 40V for transient durations.

The output of CYD2462 switches low (turns on) when a magnetic field (South or North polarity) perpendicular to the Hall element exceeds the operate point threshold, B_{OP}. After turn-on, the output is capable of sinking 20mA and the output voltage is $V_{Q(sat)}$. When the magnetic field is reduced below the release point, B_{RP}, the device output goes high (turns off). The difference in the magnetic operation and release points is the hysteresis, B_{HYS}, of the device. This built-in hysteresis allows clean switching of the output even in the presence of external mechanical vibration and electrical noise.

An external output pull-up resistor is required on the OUT terminal. The OUT terminal can be pulled up to V_{DD} or to a different voltage supply. This allows for easier interfacing with controller circuits.

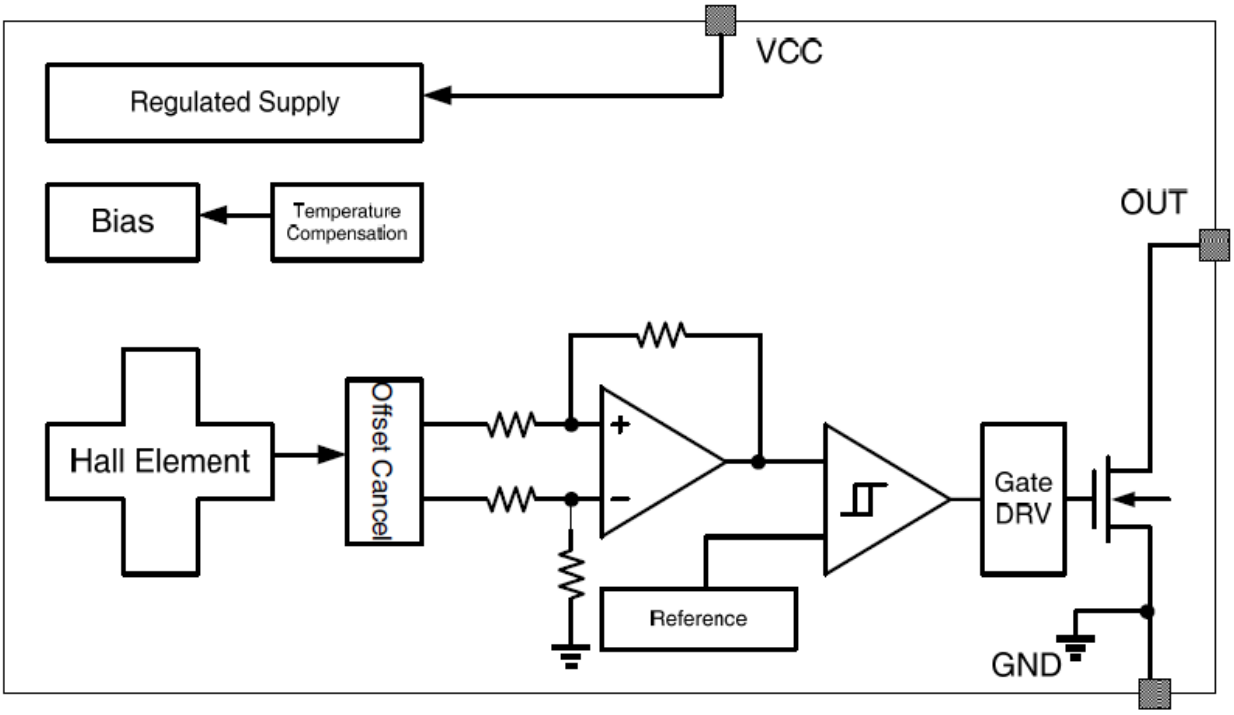

Field Direction Definition

A positive magnetic field is defined as a South pole near the marked side of the package.

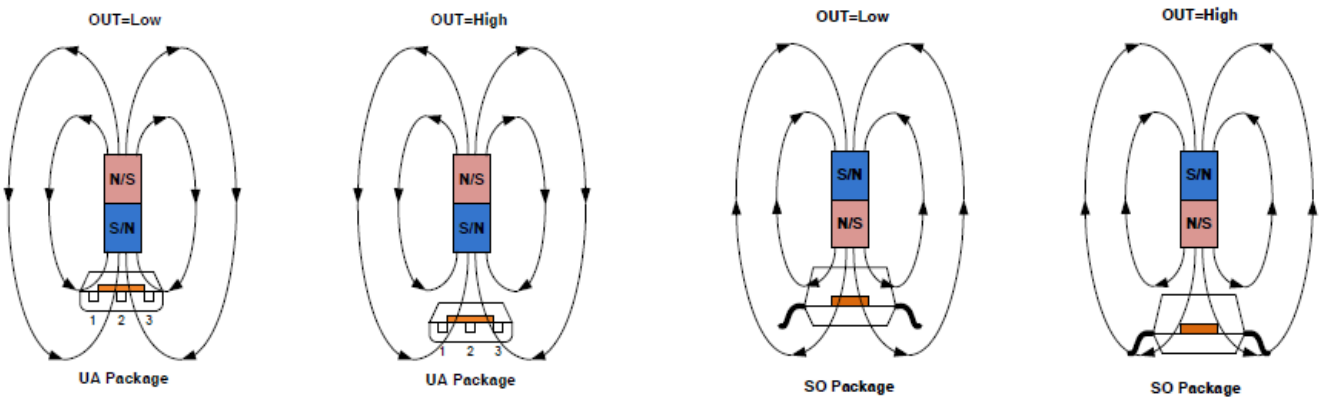

Transfer function

The CYD2462 exhibits “Omnipolar” magnetic characteristics. It means the device reacts to both North and South magnetic pole. The purpose is to detect the presence of any magnetic field applied on the device. This mode of operation simplifies customer production processes by avoiding the need to detect the Hall sensor pole active on the magnet used in the application. Therefore, the “Omnipolar” magnetic behavior helps customers by removing the need of magnet pole detection system during production phase.

Powering-on the device in the hysteresis region, less than B_{OP} and higher than B_{RP}, allows an indeterminate output state. The correct state is attained after the first excursion beyond B_{OP} or B_{RP}.

If the field strength is greater than B_{OP}, then the output is pulled low. If the field strength is less than B_{RP}, the output is released.

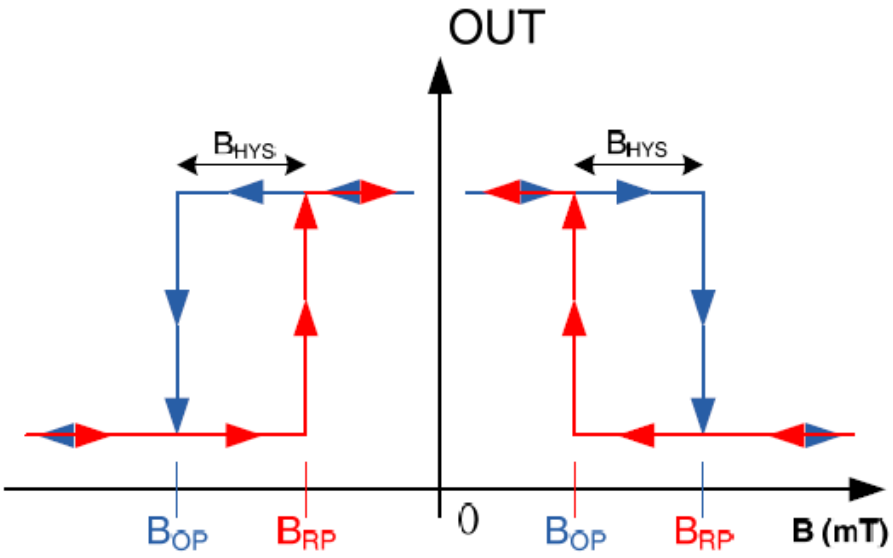

.

Device Information

Part number	packing	Mounting	Temperature	B_{OP}(typ.)	B_{RP}(typ.)
CYD2462UA	Bulk, 1000pcs/bag	SIP3	-40°C ~150°C	±2.5mT	±1.5mT
CYD2462LH	Reel, 3000pcs/reel	SOT-23			

Characteristic Data

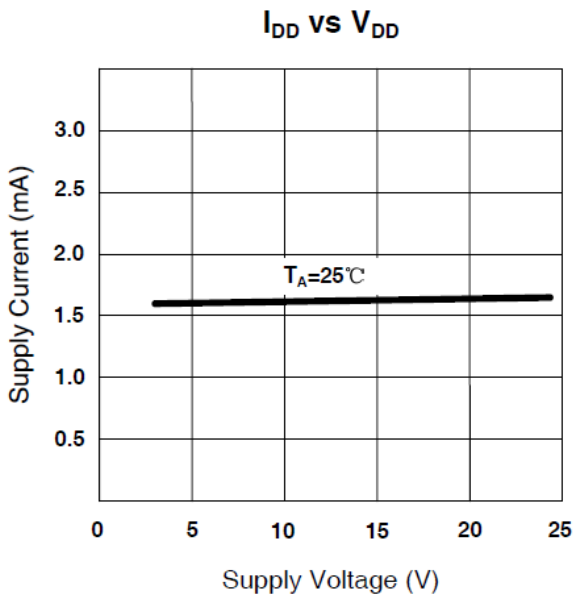

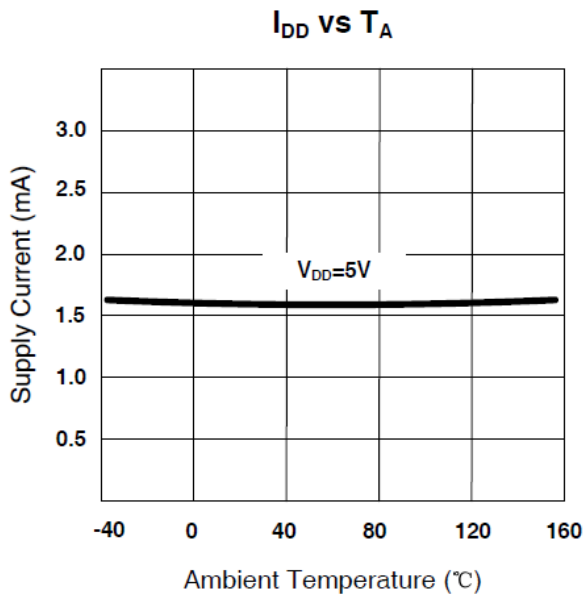

Characteristic Data (Continued)

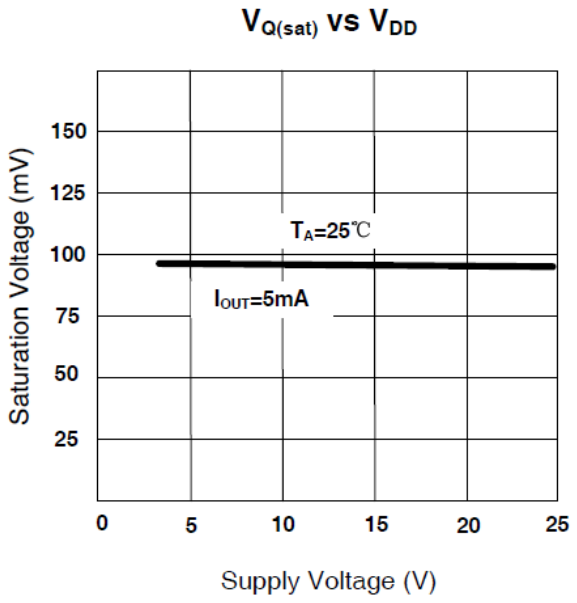

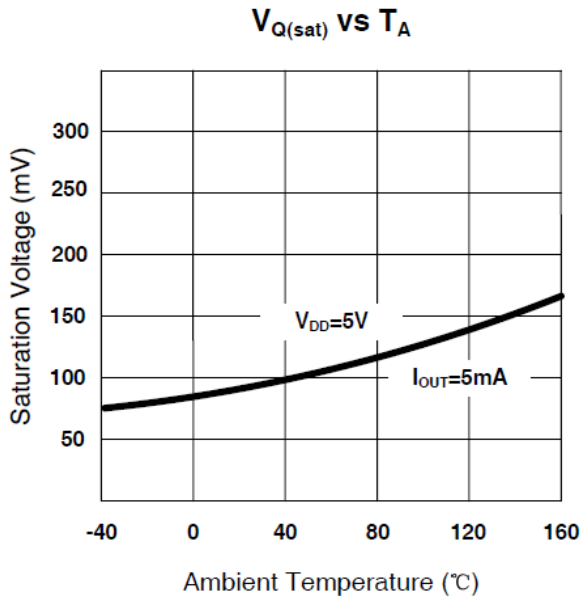

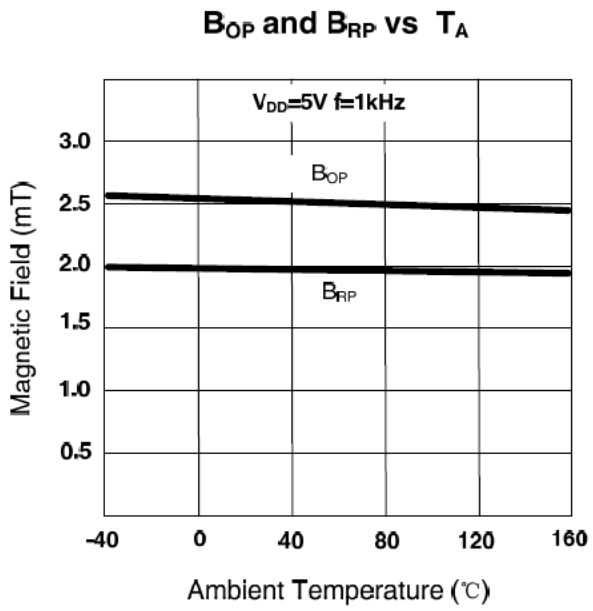

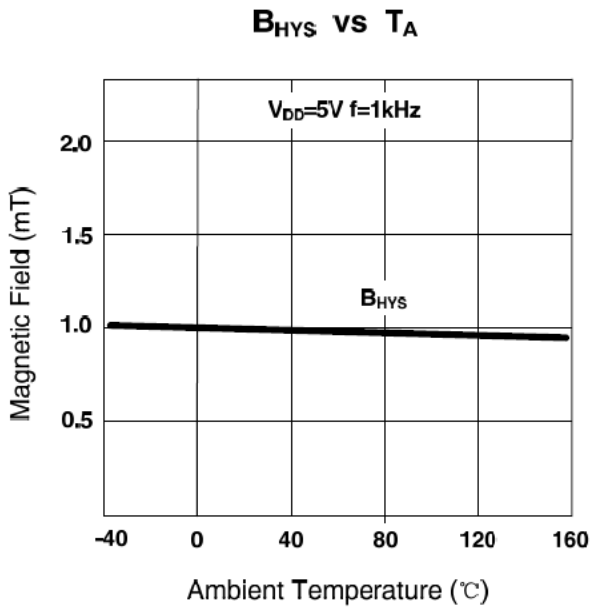

Terminal configuration and functions

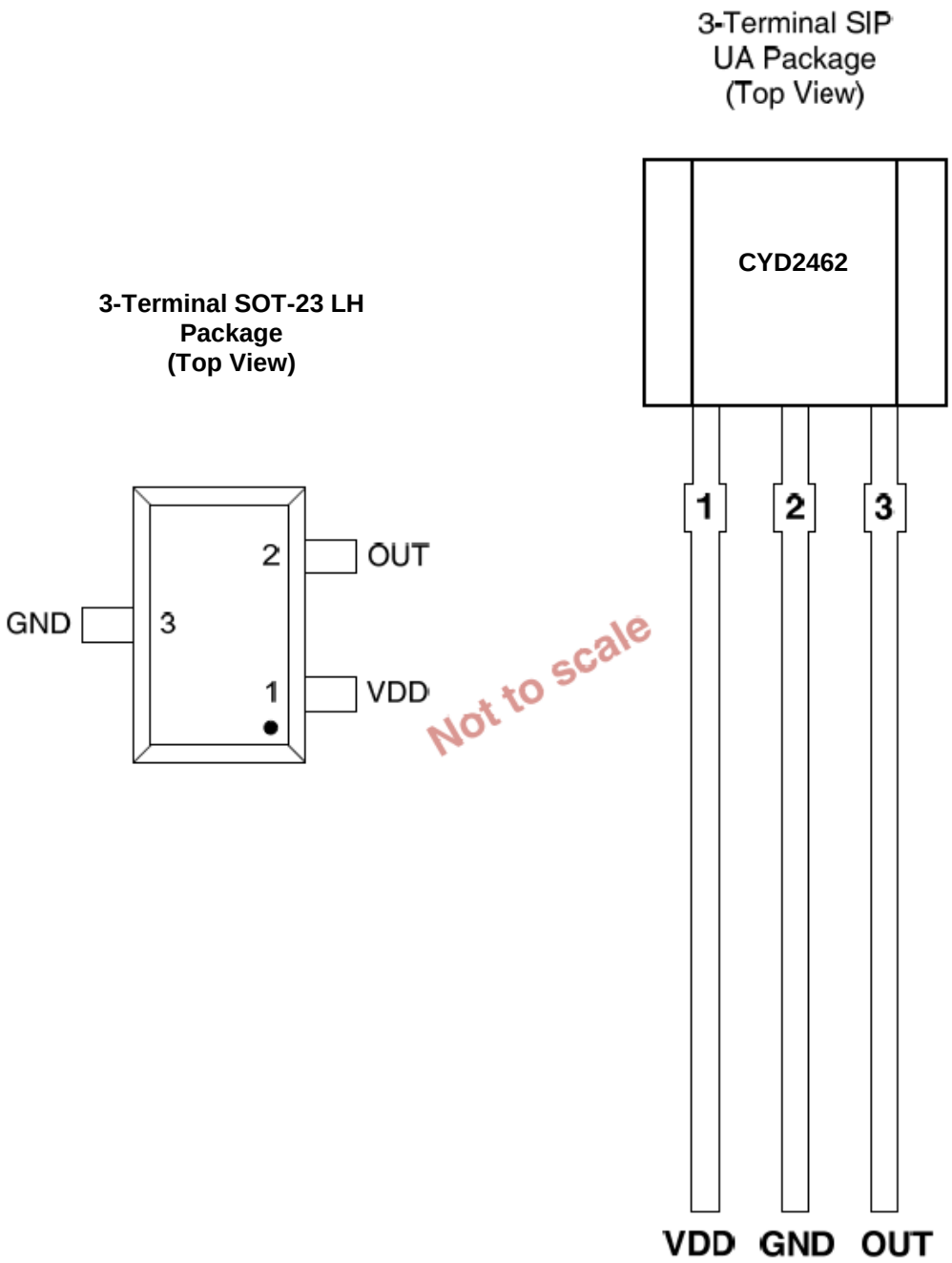

Terminal			Type	Description
Name	**UA**	**LH**		
VDD	1	1	Power	2.5 to 24V power supply
GND	2	3	Ground	Ground terminal
OUT	3	2	Output	Output terminal

Dimensions (in mm)

3-Termial UA (SIP3) Package

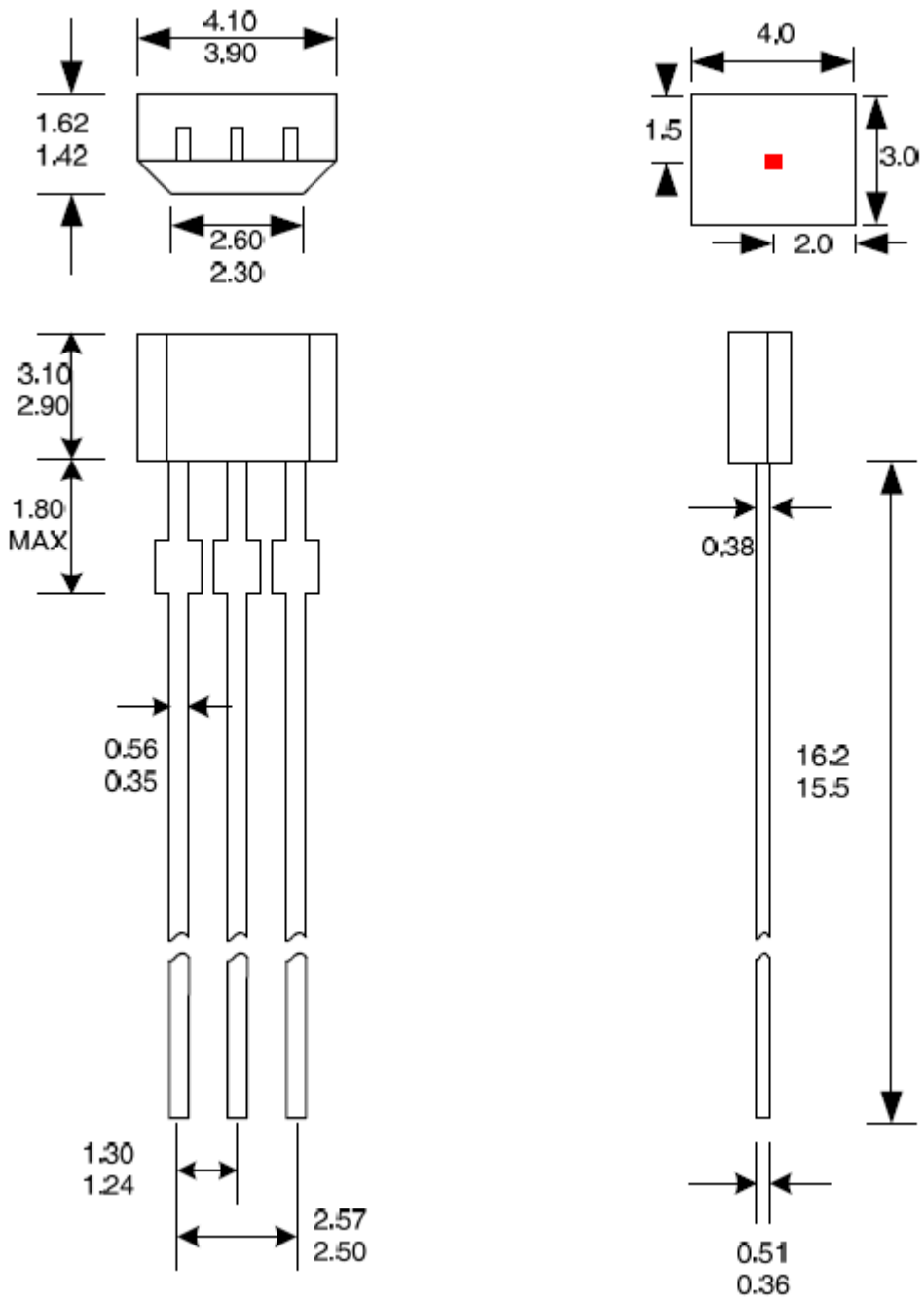

Notes:

1. Exact body and lead configuration at vendor's option within limits shown
2. Height does not include mold gate flash
3. Where no tolerance is specified, dimension is normal

Markt Schwabener Str. 8
85464 Finsing
Germany

Tel.: +49 (0)8121-2574100
Fax: +49 (0)8121-2574101
Email: info@chenyang-gmbh.com
http://www.chenyang-gmbh.com

3-Termial LH (SOT-23) Package

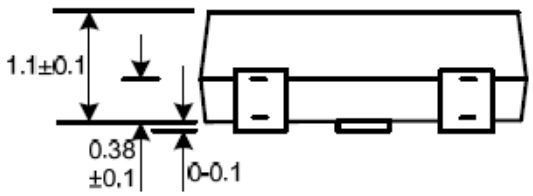

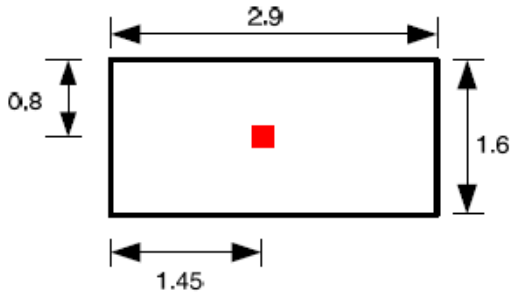

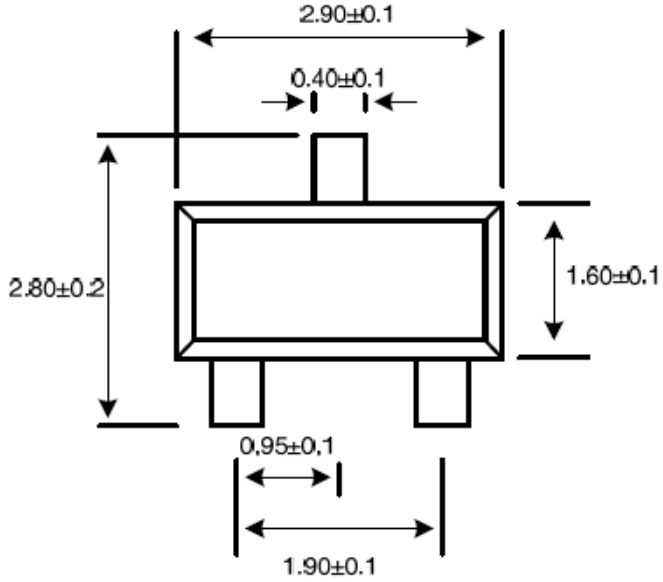

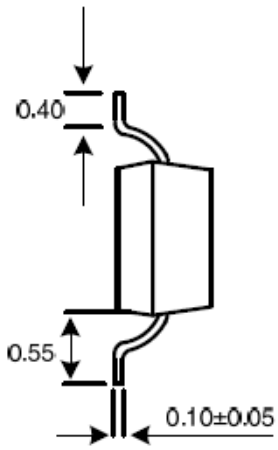

Notes:

1. Exact body and lead configuration at vendor's option within limits shown
2. Height does not include mold gate flash
3. Where no tolerance is specified, dimension is normal