Catalogue

Open Loop Hall Effect DC Current Sensors

Transducers with Round Windows

Contact Address:

Markt Schwabener Str. 8
D-85464 Finsing
Germany

Tel: +49 (0) 8121-25 74 100
Fax: +49 (0) 8121-2574 101
Email: info@chenyang.de
Internet: www.chenyang.de

Contents

Markt Schwabener Str. 8
D-85464 Finsing
Germany

Tel: +49 (0) 8121-25 74 100
Fax: +49 (0) 8121-25 74 101
Email: info@chenyang.de
Internet: www.chenyang.de

Hall Effect DC Current Sensor CYCT03-L20

The sensor **CYCT03-L20** is based on magnetic modulation principle and designed with a high galvanic isolation between primary conductor and secondary circuit. It can be used for measurement of DC current.

Features and Advantages	Applications
• DC current measurement • High isolation between primary and secondary circuits • Protection against reversed polarity • Output protection against electrical disturbances	• DC motor drivers • Battery banks, such as, monitoring load current and charge current, verifying operation • Power supply management • Telecommunication application

Specifications

Rated input current range	500mA, 750mA, 1A, 2A, 3A, 5A, 10A, 15A, 20A, 25A
Output signal	0-5VDC, 0-20mA, 4-20mA, 0-10VDC
Power supply	+12VDC, +15VDC, +24VDC
Measuring accuracy	±1.0% FS
Linearity (10% - 100%), 25°C	±0.5% FS
Isolation	between input, output and power supply
Load resistance	≥2kΩ for voltage output, ≤250Ω for current output
Isolation withstanding voltage	2.5 kV DC, 1min, leakage current 1mA
Operating temperature	-40°C ~ +85°C
Storage temperature	-40°C ~ +85°C
Relative humidity	10% ~ 90%
Response time	≤120ms
Thermal drift of offset voltage	≤600ppm/°C
Thermal Drift (-40°C to 85°C)	<2200ppm /°C
Quiescent power consumption	500mW – 1300mW (depending on power supply)
Mounting	Panel Screw mounting
Case style	L20 with aperture Ø20mm

Definition of Part number:

CYCT03	-	L20	-	M	-	x	n
(1)		(2)		(3)		(4)	(5)

(1)	(2)	(3)	(4)	(5)
Series name	Case style	Rated Input current (M=U/B+m)	Output signal	Power supply
CYCT03	L20	m = 500mA, 750mA, 1A, 2A, 3A, 5A, 10A, 15A, 20A, 25A	**x=3:** 0-5V DC **x=4:** 0-20mA DC **x=5:** 4-20mA DC **x=8:** 0-10V DC	n**=2:** +12V DC n=**3**: +15V DC n**=4:** +24V DC

U: unidirectional; B: bidirectional (please add U or B in the part number)

Example 1: CYCT03-L20-U10A -32, DC Current sensor with
Output signal: 0-5V DC
Power supply: +12V DC
Rated input current: 0-10A DC

Example 2: CYCT03-L20-U10A -54, DC Current sensor with
Output signal: 4-20mA DC
Power supply: +24V DC
Rated input current: 0-10A DC

Example 3: CYCT03-L20-U10A -84, DC Current sensor with
Output signal: 0-10V DC
Power supply: +24V DC
Rated input current: 0-10A DC

DIMENSIONS (mm)

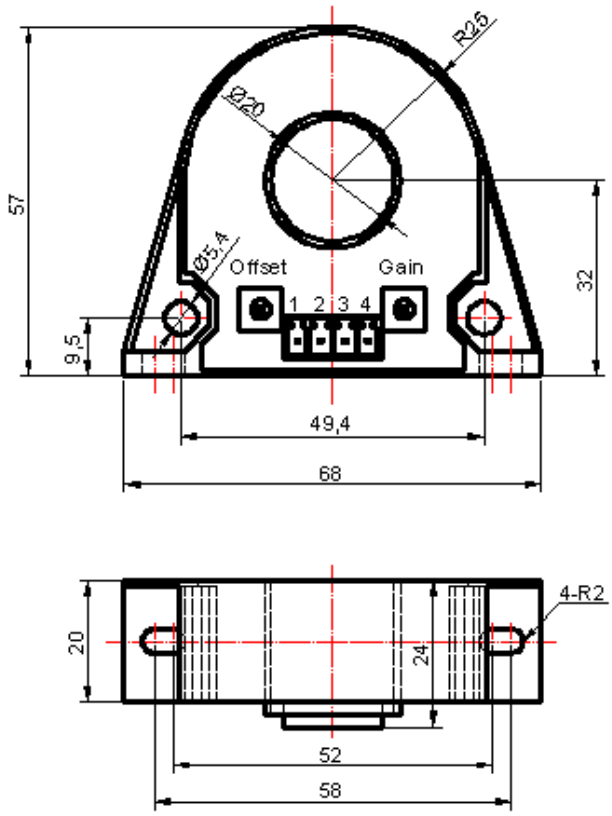

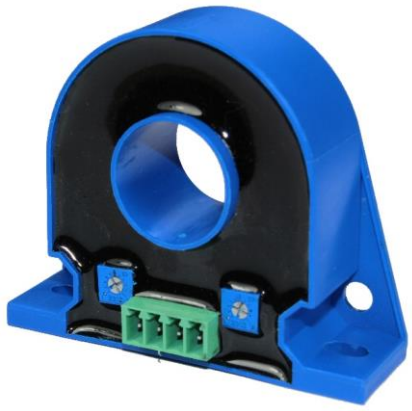

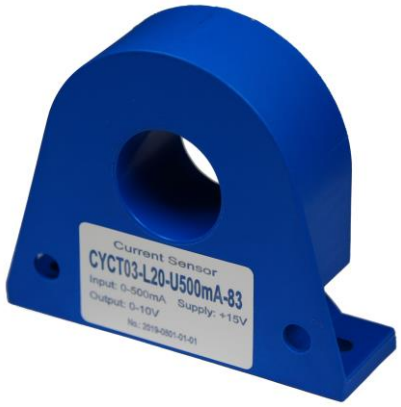

Dimensions: 68mm x 57mm x 24mm, Aperture: Ø20 mm

CONNECTIONS

The current carrying cable must pass through the window. The current direction is indicated by the arrow on the case.

Wiring of Terminals for voltage output:

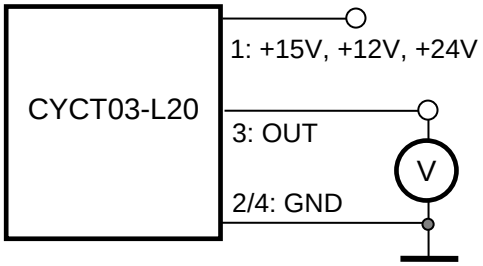

Relation between Input and Output:

Sensor CYCT03-L20-U10A-32	
Input current (A)	Output voltage (V)
0	0
2.5	1.25
5.0	2.5
7.5	3.75
10	5

1: Power supply; 2: GND; 3: Voltage Output; 4: GND

Wiring of Terminals for Current Output:

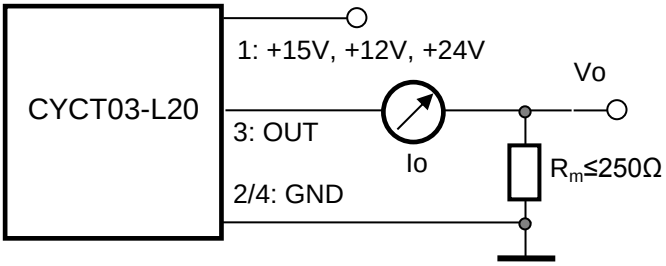

1: Power supply; 2: GND; 3: Current Output; 4: GND

Relation between Input and Output (for R_m=250 Ω):

Sensor CYCT03-L20-U10A-54		
Input current (A)	Output current Io(mA)	Output voltage Vo (V)
0	4	1
2.5	8	2
5.0	12	3
7.5	16	4
10	20	5

Notes:

1. Before powering on the device, make sure the polarities of all connections are correct. Avoid wrong connection.
2. The two potentiometers can (only if really necessary) be used to adjust the accuracy of the sensor by using a small screwdriver.
3. Make sure to use a measuring instrument which has a better accuracy than the sensor, when calibrating the sensor.
4. Best accuracy can be archieved if window is completly filled by the current-carrying conductor.

Split Core Hall Effect DC Current Sensor CYHCT-EKCV

This Hall Effect current sensor is based on open loop principle and designed with a high galvanic isolation between primary conductor and secondary circuit. It can be used for measurement of DC current, DC pulse currents etc. The output of the transducer reflects the real wave of the current carrying conductor.

Product Characteristics	Applications
• Excellent accuracy • Very good linearity • Using split cores and easy mounting • Less power consumption • Window structure • Electrically isolating the output of the transducer from the current carrying conductor • No insertion loss • Current overload capability	• **Photovoltaic equipment** • Frequency conversion timing equipment • Various power supply • Uninterruptible power supplies (UPS) • Electric welding machines • Transformer substation • Numerical controlled machine tools • Electric powered locomotive • Microcomputer monitoring • Electric power network monitoring

Electrical Data

Primary Nominal DC Current I_r (A)	Measuring Range (A)	DC Output Voltage (V)	Aperture Diameter (mm)	Part number
30A	0 ~ ± 30A	x=0: 0-4V ±1.0% x=3: 0-5V ±1.0% x=8: 0-10V ±1.0%	12	CYHCT-EKCV-U/B30A-xn
50A	0 ~ ± 50A			CYHCT-EKCV-U/B50A-xn
80A	0 ~ ± 80A			CYHCT-EKCV-U/B80A-xn
100A	0 ~ ± 100A			CYHCT-EKCV-U/B100A-xn
200A	0 ~ ± 200A			CYHCT-EKCV-U/B200A-xn
300A	0 ~ ± 300A			CYHCT-EKCV-U/B300A-xn

(n=2, *Vcc*= +12VDC; n=3, *Vcc* =+15VDC; n=4, *Vcc* =+24VDC, U: unidirectional input current; B: bidirectional input current, please give U or B in Part number)

Supply Voltage	V_{cc}= +12V, +15V, +24VDC ± 5%
Output Voltage at I_r, T_A=25°C:	V_{out} =0- 4V, 0-5V, 0-10VDC
Current Consumption	I_c < 25mA
Galvanic isolation, 50/60Hz, 1min:	3kV rms
Output Impedance:	R_{out} < 150Ω
Load resistance:	10kΩ

Accuracy and Dynamic performance data

Accuracy at I_r, T_A=25°C,	X <±1.0% FS
Linearity from 0 to I_r, T_A=25°C,	E_L <±0.5% FS
Electric Offset Voltage, T_A=25°C,	V_{oe} <50mV
Magnetic Offset Voltage (I_r →0)	V_{om} <±20mV
Thermal Drift of Offset Voltage,	V_{ot} <±1.0mV/°C
Response Time at 90% of I_P (*f*=1k Hz)	t_r < 1ms
Frequency Bandwidth (-3dB),	f_b = DC - 20 kHz
Case Material:	PBT

General Data

Operating Temperature,	T_A = -25°C ~ +85°C
Storage Temperature,	T_S =-40°C ~ +100°C
Unit weight:	35g/unit

Dimensions

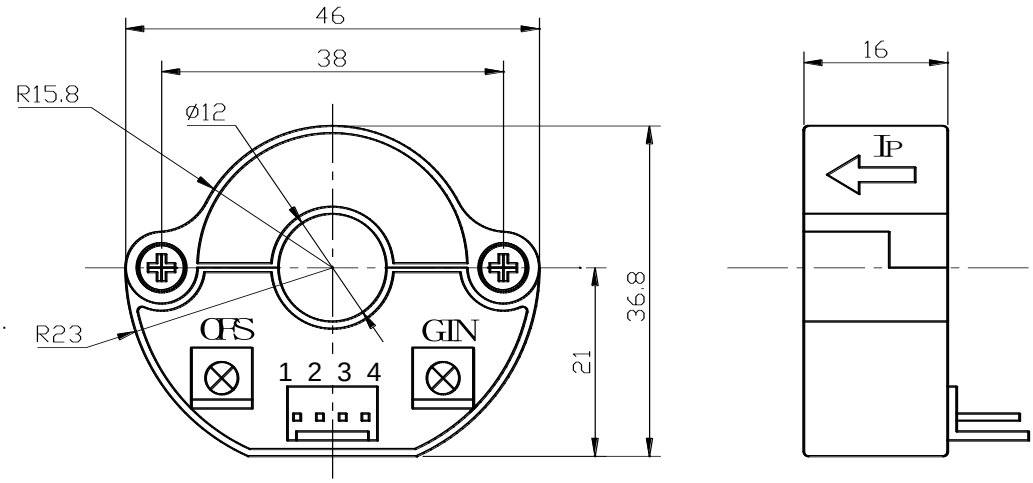

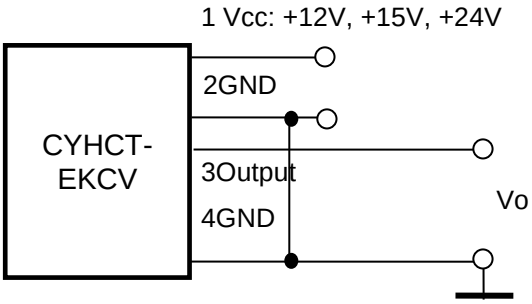

Pin Arrangement

1: Vcc 2: Ground (GND) 3: Output 4: Ground (GND)

GIN: gain adjustment OFS: offset adjustment

Notes:

1. Connect the terminals of power source, output respectively and correctly, never make wrong connection.
2. Two potentiometers can be adjusted, only if necessary, by turning slowly to the required accuracy with a small screwdriver.
3. The best accuracy can be achieved when the window is fully filled with bus-bar (current carrying conductor).
4. The in-phase output can be obtained when the direction of current of current carrying conductor is the same as the direction of arrow marked on the transducer.

Split Core Hall Effect DC Current Sensor CYHCT-EKCC

This Hall Effect current sensor is based on open loop principle and designed with a high galvanic isolation between primary conductor and secondary circuit. It can be used for measurement of DC current, DC pulse currents etc. The output of the transducer reflects the real wave of the current carrying conductor.

Product Characteristics	Applications
• Excellent accuracy • Very good linearity • Using split cores and easy mounting • Less power consumption • Window structure • Electrically isolating the output of the transducer from the current carrying conductor • No insertion loss • Current overload capability	• **Photovoltaic equipment** • Frequency conversion timing equipment • Various power supply • Uninterruptible power supplies (UPS) • Electric welding machines • Transformer substation • Numerical controlled machine tools • Electric powered locomotive • Microcomputer monitoring • Electric power network monitoring

Electrical Data

Primary Nominal DC Current I_r (A)	Measuring Range (A)	DC Output Current (mA)	Aperture Diameter (mm)	Part number
30A	0 ~ ± 30A	4-20 ±1.0%	12	CYHCT-EKCC-U/B30A-n
50A	0 ~ ± 50A			CYHCT-EKCC-U/B50A-n
80A	0 ~ ± 80A			CYHCT-EKCC-U/B80A-n
100A	0 ~ ± 100A			CYHCT-EKCC-U/B100A-n
200A	0 ~ ± 200A			CYHCT-EKCC-U/B200A-n
300A	0 ~ ± 300A			CYHCT-EKCC-U/B300A-n

(U: unidirectional input current; B: bidirectional input current, please give U or B in Part number)
(n=3, *Vcc*= +12VDC ±5%; n=4, *Vcc* =+15VDC ±5%; n=5, *Vcc* =+24VDC±5%)

Supply Voltage	V_{cc}= +12V, +15V, +24VDC ± 5%
Current Consumption	I_c < 25mA + Output current
Galvanic isolation, 50/60Hz, 1min:	3kV rms
Isolation resistance @ 500 VDC	> 500 MΩ

Accuracy and Dynamic performance data

Accuracy at I_r, T_A=25°C,	X <±1.0% FS
Linearity from 0 to I_r, T_A=25°C,	E_L <±0.5% FS
Electric Offset current, T_A=25°C,	4mA DC or 12mA DC
Thermal Drift of Offset Current,	<±0.005mA/°C
Response Time at 90% of I_P	t_r < 1ms
Load resistance:	80-450Ω
Frequency Bandwidth (-3dB),	f_b = DC - 20 kHz
Case Material:	PBT

General Data

Operating Temperature,	T_A = -25°C ~ +85°C
Storage Temperature,	T_S =-40°C ~ +100°C
Unit weight:	35g/unit

Dimensions

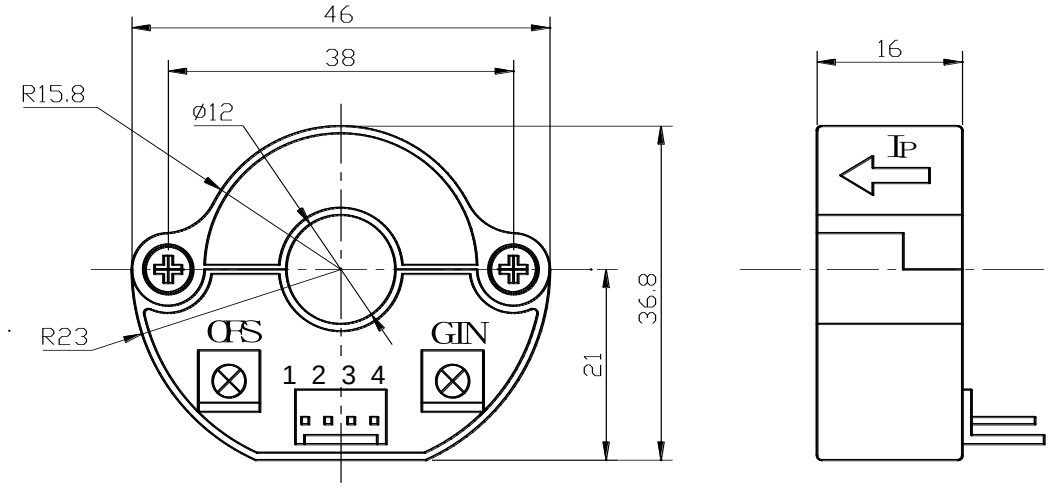

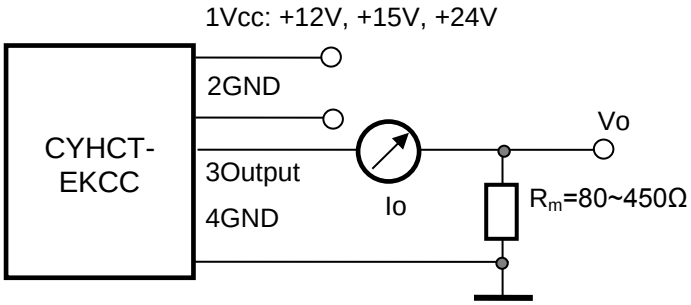

Pin Arrangement

1: Vcc 2: Ground (GND) 3: Output 4: Ground (GND)

GIN: gain adjustment OFS: offset adjustment

Notes:

1. Connect the terminals of power source, output respectively and correctly, never make wrong connection.
2. Two potentiometers can be adjusted, only if necessary, by turning slowly to the required accuracy with a small screwdriver.
3. The best accuracy can be achieved when the window is fully filled with bus-bar (current carrying conductor).
4. The in-phase output can be obtained when the direction of current of current carrying conductor is the same as the direction of arrow marked on the transducer

Hall Effect DC Current Sensor CYHCT-WS3

The sensor CYHCT-WS3 is a Hall Effect sensor for the measurement of DC current. The sensor has a galvanic isolation between the high power primary conductor and the secondary electronic circuit and different output signals and different power supplies.

.

Features and Advantages	Applications
• DC current measurement • Output signal option (4-20mA, 0-5V, 0-10V, ±5V) • High isolation between primary and secondary circuits • No insertion losses • Temperature compensation	• **Photovoltaic equipment** • Battery banks, such as, monitoring load current and charge current, verifying operation • Transportation, measuring traction power • Phase fired controlled heaters • Directly connect to PLC • Sense motor stalls and short circuits • Industrial instrumentation

.

Specifications

Rated input current (DC)	25A, 30A,40A,50A,60A,70A,80A,90A,100A,200A,300A,400A,500A		
Linear measuring range	1.2 times of rated input current		
Output signals	±5V DC, 0-5VDC, 0-10VDC, 0-20mADC, 4-20mADC		
Power supply	+12V DC, +15VDC, +24V DC		
Measuring accuracy	Voltage output: ±1.0% for 25A~40A, ±0.5% for 50A~500A 4-20mA output: ±1.0% for 25A~40A, ±0.5% for 50A~500A 0-20mA output: ±1.0% for 25A ~ 500A		
Linearity (10% - 100%), 25°C	Voltage output: ±0.5% for 25A~40A, ±0.2% for 50A~500A 4-20mA output: ±0.5% for 25A~40A, ±0.2% for 50A~500A 0-20mA output: ±0.5% for 25A ~ 500A		
Zero offset voltage	±10mV	Hysteresis error	±10mV
Thermal drift of offset voltage	≤300ppm/°C	Thermal Drift (-10°C to 50°C)	<1000ppm /°C
Galvanic isolation	3 kV DC,1min.		
Isolation resistance	≥100MΩ		
Response time	≤10µs for instantaneous output, <1ms DC output		
Frequency Bandwidth (-3dB)	DC – 8kHz		
di/dt following accuracy	50A/µs		
Overload capacity	5 times of rated current		
Current consumption	≤25mA for voltage output, 25mA + Output current for current output		
Output load	Voltage output : ≥2kΩ, Current output: ≤250Ω		
Mounting	35mm DIN Rail		
Case style and Window size	WS3 with aperture Ø20mm		
Protection of Case	IP20		
Operating temperature	-40°C ~ +70°C	Storage temperature	-40°C ~ +85°C
Relative humidity	≤90%		
MTBF	≥ 100k hours		

Definition of Part number:

CYHCT	-	WS3	-	M	-	x	n
(1)		(2)		(3)		(4)	(5)

(1)	(2)	(3)	(4)	(5)
Series name	Case style	Rated Input current (M=U/B m)	Output signal	Power supply
CYHCT	WS3	m = 25A, 30A, 40A, 50A,60A,70A,80A,90A,100A, 200A, 300A, 400A, 500A (other input current between 25A-500A)	**x=1:** tracing voltage ±5V DC **x=3:** 0-5V DC **x=4:** 0-20mA DC **x=5:** 4-20mA DC **x=8:** 0-10V DC	n**=2:** +12V DC n=**3**: +15V DC n**=4:** +24V DC

U: unidirectional; B: bidirectional (please give U or B in the part number)

Example 1: CYHCT-WS3-U100A -34, Hall Effect DC Current sensor with
Output signal: 0-5V DC
Power supply: +24V DC
Rated input current: 0-100A DC

Example 2: CYHCT-WS3-U100A -54, Hall Effect DC Current sensor with
Output signal: 4-20mA DC
Power supply: +24V DC
Rated input current: 0-100A DC

DIMENSIONS (mm)

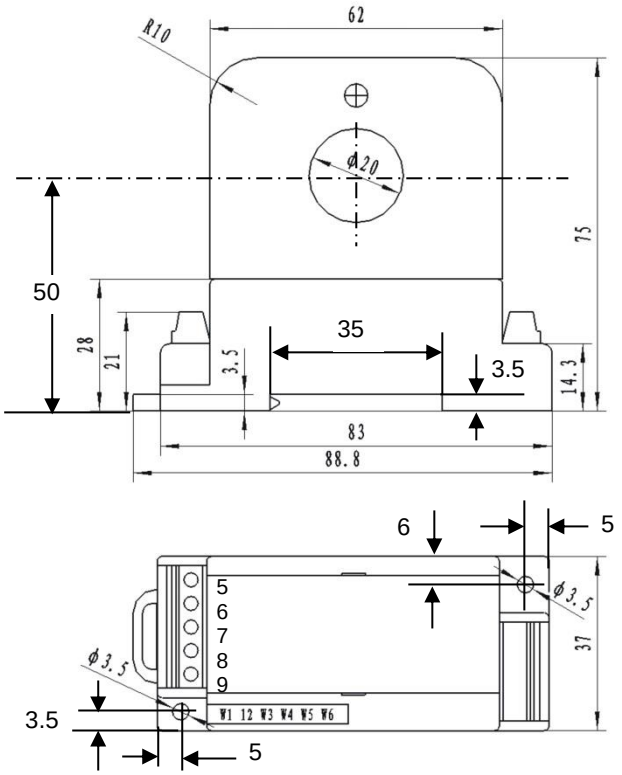

Dimensions: 75mm x 83mm x 37mm, Aperture: Ø20 mm

CONNECTIONS

The current carrying cable must pass through the window. The phase of output is the same as that of the current passing the window in the direction of the arrow indicated on the case.

Wiring of Terminals for voltage output:

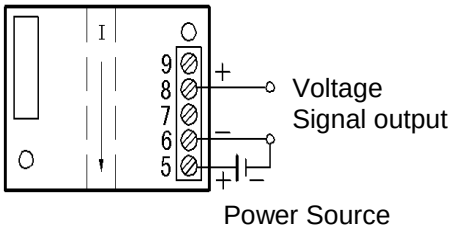

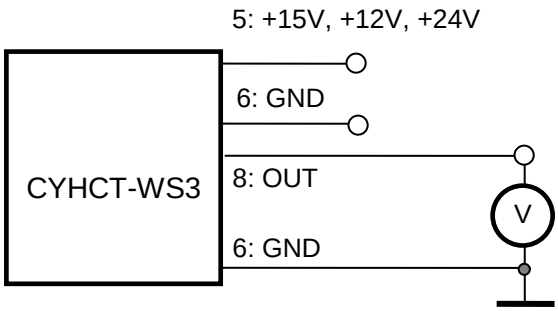

5: +15V, +12V, +24V Power Supply 6: GND 8: Voltage output

Relation between Input and Output:

Sensor CYHCT-WS3-U100A-34	
Input current (A)	Output voltage (V)
0	0
25	1.25
50	2.5
75	3.75
100	5

Wiring of Terminals for Current Output:

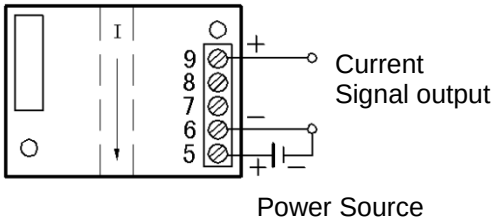

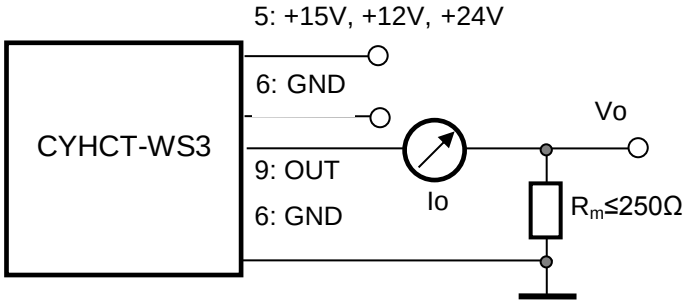

5: +15V, +12V, +24V Power Supply 6: GND 9: Current output

Relation between Input and Output (for R_m=250 Ω):

Sensor CYHCT-WS3-U100A-54		
Input current (A)	Output current Io(mA)	Output voltage Vo (V)
0	4	1
25	8	2
50	12	3
75	16	4
100	20	5

Notes:

1. Connect the terminals of power source, output respectively and correctly, never make wrong connection.
2. Two potentiometers can be adjusted, only if necessary, by turning slowly to the required accuracy with a small screw driver.
3. The best accuracy can be achieved when the window is fully filled with bus-bar (current carrying conductor).
4. The in-phase output can be obtained when the direction of current of current carrying conductor is the same as the direction of arrow marked on the transducer case.

Split Core Hall Effect DC Current Sensor CYHCT-S3K

The sensor CYHCT-S3K is based on open loop principle and designed with a high galvanic isolation between primary conductor and secondary circuit. It can be used for measurement of DC current, DC pulse currents etc. The output of the transducer reflects the real wave of the current carrying conductor.

Features and Advantages	Applications
• DC current measurement • Output signal option (4-20mA, 0-5V, 0-10V) • High isolation between primary and secondary circuits • No insertion losses • Split Core, easy installation • Temperature compensation	• **Photovoltaic equipment** • Battery banks, such as, monitoring load current and charge current, verifying operation • Transportation, measuring traction power or auxiliary loads • Phase fired controlled heaters • Directly connect to PLC • Sense motor stalls and short circuits • Industrial instrumentation

Specifications

Rated input current (DC)	25A,30A,40A,50A,60A,70A,80A,90A,100A,200A,300A,400A,500A		
Linear measuring range	1.2 times of rated input current		
Output signals	0-5VDC, 0-10VDC, 0-20mADC, 4-20mADC		
Power supply	+12V DC, +15VDC, +24V DC		
Measuring accuracy	Voltage output: ±1.0% for 25A~49A, ±0.5% for 50A~500A 4-20mA output: ±1.0% for 25A~49A, ±0.5% for 50A~500A 0-20mA output: ±1.0% for 25A ~ 500A		
Linearity at 25°C	Voltage output: ±0.5% for 25A~49A, ±0.2% for 50A~500A 4-20mA output: ±0.5% for 25A~49A, ±0.2% for 50A~500A 0-20mA output: ±0.5% for 25A ~ 500A		
Zero offset voltage	±10mV	Hysteresis error:	±10mV
Thermal drift of offset voltage	≤300ppm/°C	Thermal Drift (-10°C to 50°C):	<1000ppm /°C
Galvanic isolation	3 kV DC, 1 min		
Isolation resistance	≥100MΩ		
Response time	<1ms DC output		
Frequency Bandwidth (-3dB)	DC – 8kHz		
di/dt following accuracy	50A/µs		
Overload capacity	5 times of rated current		
Current consumption	≤25mA for voltage output, 25mA + Output current for current output		
Output load	Voltage output : ≥2kΩ, Current output: ≤250Ω		
Mounting	Panel Screw mounting		
Case style and Window size	S3K with aperture Ø20mm		
Protection of Case	IP20		
Operating temperature	-40°C ~ +85°C	Storage temperature	-55°C ~ +100°C
Relative humidity	≤90%		
MTBF	≥ 100k hours		

Definition of Part number:

CYHCT	-	S3K	-	M	-	x	n
(1)		(2)		(3)		(4)	(5)

(1)	(2)	(3)	(4)	(5)
Series name	Case style	Rated Input current (M=U/B m)	Output signal	Power supply
CYHCT	S3K	m = 25A, 30A, 40A,50A,60A,70A, 80A, 90A,100A, 200A, 300A, 400A, 500A (other input current between 25A-500A)	**x=3:** 0-5V DC **x=4:** 0-20mA DC **x=5:** 4-20mA DC **x=8:** 0-10V DC	n**=2:** +12V DC n=**3**: +15V DC n**=4:** +24V DC

U: unidirectional; B: bidirectional (please give U or B in the part number)

Example 1: CYHCT-S3K-U100A -34, Hall Effect DC Current sensor with
Output signal: 0-5V DC
Power supply: +24V DC
Rated input current: 0-100A DC

Example 2: CYHCT-S3K-U100A -54, Hall Effect DC Current sensor with
Output signal: 4-20mA DC
Power supply: +24V DC
Rated input current: 0-100A DC

DIMENSIONS (mm)

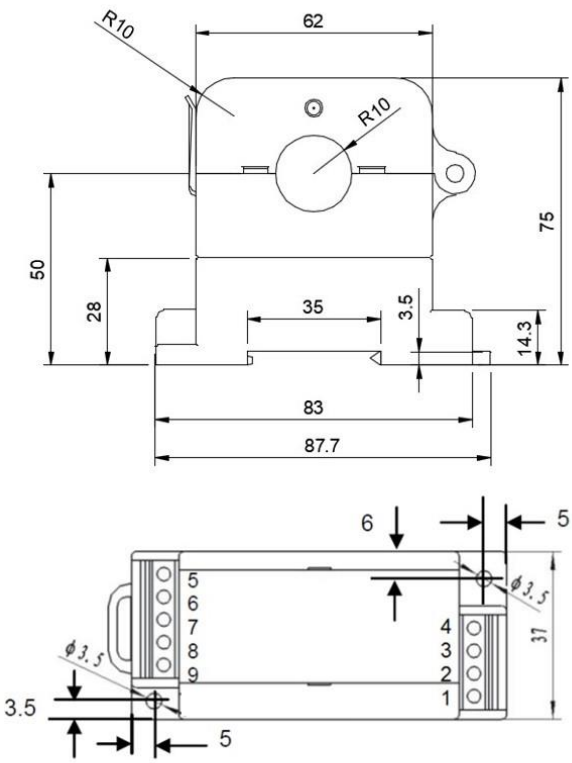

83 x 37 x 75mm

CONNECTIONS

The current carrying cable must pass through the window. The phase of output is the same as that of the current passing the window in the direction of the arrow indicated on the case.

Wiring of Terminals for voltage output:

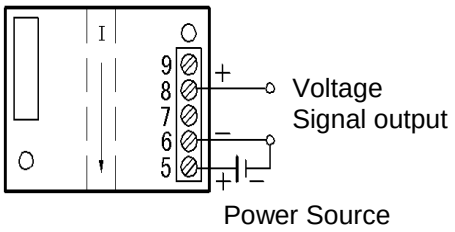

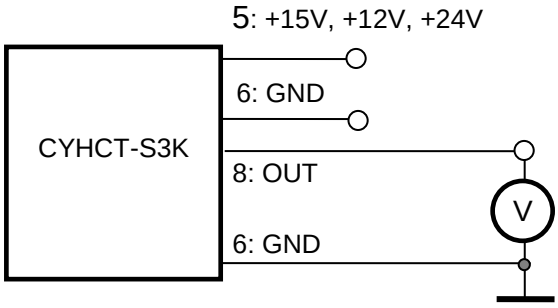

5: +15V, +12V, +24V Power Supply 6: GND 8: Voltage output

Relation between Input and Output:

Sensor CYHCT-S3K-U100A-34	
Input current (A)	Output voltage (V)
0	0
25	1.25
50	2.5
75	3.75
100	5

Wiring of Terminals for Current Output:

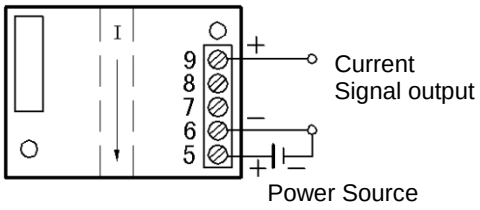

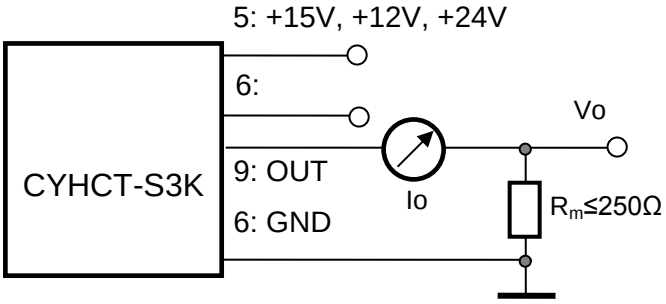

5: +15V, +12V, +24V Power Supply 6: GND 9: Current output

Relation between Input and Output (for R_m=250 Ω):

Sensor CYHCT-S3K-U100A-54		
Input current (A)	Output current Io(mA)	Output voltage Vo (V)
0	4	1
25	8	2
50	12	3
75	16	4
100	20	5

Notes:

5. Connect the terminals of power source, output respectively and correctly, never make wrong connection.
6. Two potentiometers can be adjusted, only if necessary, by turning slowly to the required accuracy with a small screw driver.
7. The best accuracy can be achieved when the window is fully filled with bus-bar (current carrying conductor).
8. The in-phase output can be obtained when the direction of current of current carrying conductor is the same as the direction of arrow marked on the transducer case.

Hall Effect DC Current Sensor CYHCT-L20K

The sensor CYHCT-L20K is based on open loop principle and designed with a high galvanic isolation between primary conductor and secondary circuit. It can be used for measurement of DC current, DC pulse currents etc. The output of the transducer reflects the real wave of the current carrying conductor.

Features and Advantages	Applications
• DC current measurement • Output signal option (4-20mA, 0-5V, 0-10V, ±5V) • High isolation between primary and secondary circuits • No insertion losses • Temperature compensation	• **Photovoltaic equipment** • Battery banks, such as, monitoring load current and charge current, verifying operation • Transportation, measuring traction power or auxiliary loads • Phase fired controlled heaters • Directly connect to PLC • Sense motor stalls and short circuits • Industrial instrumentation

Specifications

Rated input current (DC)	25A, 30A,40A,50A,60A,70A,80A,90A,100A,200A,300A,400A,500A		
Linear measuring range	1.2 times of rated input current		
Output signals	±5V DC, 0-5VDC, 0-10VDC, 0-20mADC, 4-20mADC		
Power supply	+12V DC, +15VDC, +24V DC		
Measuring accuracy	Voltage output: ±1.0% for 25A~40A, ±0.5% for 50A~500A 4-20mA output: ±1.0% for 25A~40A, ±0.5% for 50A~500A 0-20mA output: ±1.0% for 25A ~ 500A		
Linearity (10% - 100%), 25°C	Voltage output: ±0.5% for 25A~40A, ±0.2% for 50A~500A 4-20mA output: ±0.5% for 25A~40A, ±0.2% for 50A~500A 0-20mA output: ±0.5% for 25A ~ 500A		
Zero offset voltage	±10mV	Hysteresis error	±10mV
Thermal drift of offset voltage	≤300ppm/°C	Thermal Drift (-10°C to 50°C)	<1000ppm /°C
Galvanic isolation	3 kV DC, 1 min		
Isolation resistance	≥100MΩ		
Response time	≤10µs for instantaneous output, <1ms DC output		
Frequency Bandwidth (-3dB)	DC – 8kHz		
di/dt following accuracy	50A/µs		
Overload capacity	5 times of rated current		
Current consumption	≤25mA for voltage output, 25mA + Output current for current output		
Output load	Voltage output : ≥2kΩ, Current output: ≤250Ω		
Mounting	Panel Screw mounting		
Case style and Window size	L20K with aperture Ø20mm		
Protection of Case	IP20		
Operating temperature	-40°C ~ +85°C	Storage temperature	-55°C ~ + 100°C
Relative humidity	≤90%		
MTBF	≥ 100k hours		

Definition of Part number:

CYHCT	-	L20K	-	M	-	x	n
(1)		(2)		(3)		(4)	(5)

(1)	(2)	(3)	(4)	(5)
Series name	Case style	Rated Input current (M=U/B m)	Output signal	Power supply
CYHCT	L20K	m = 25A, 30A, 40A, 50A,60A,70A,80A,90A,100A, 200A, 300A, 400A, 500A (other input current between 25A-500A)	**x=1:** instantaneous voltage ±5V DC **x=3:** 0-5V DC **x=4:** 0-20mA DC **x=5:** 4-20mA DC **x=8:** 0-10V DC	n**=2:** +12V DC n=**3**: +15V DC n**=4:** +24V DC

U: unidirectional; B: bidirectional (please give U or B in the part number)

Example 1: CYHCT-L20K-U100A -34, Hall Effect DC Current sensor with
Output signal: 0-5V DC
Power supply: +24V DC
Rated input current: 0-100A DC

Example 2: CYHCT-L20K-U100A -54, Hall Effect DC Current sensor with
Output signal: 4-20mA DC
Power supply: +24V DC
Rated input current: 0-100A DC

DIMENSIONS (mm)

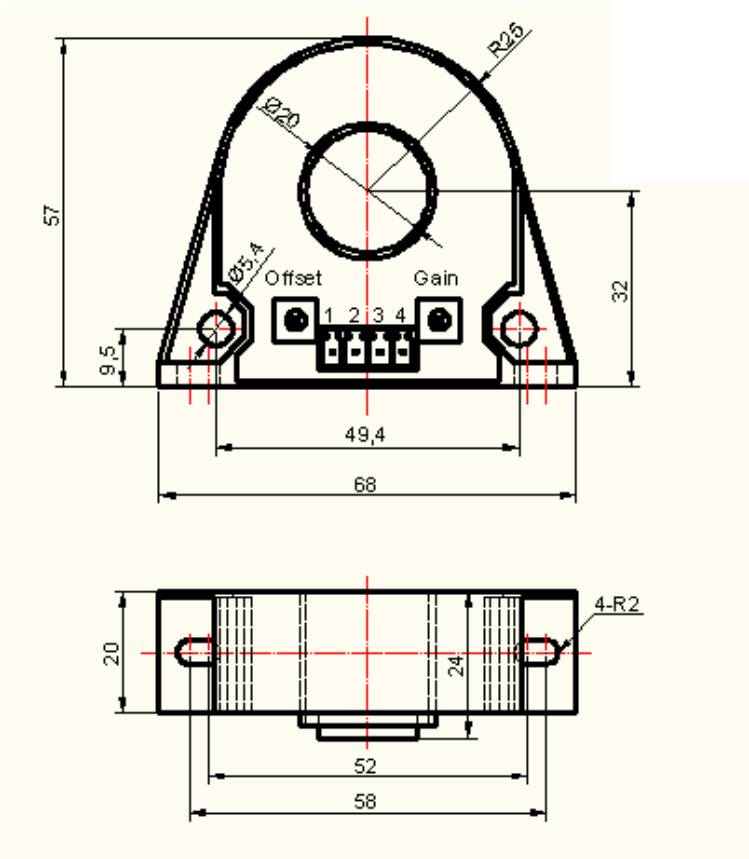

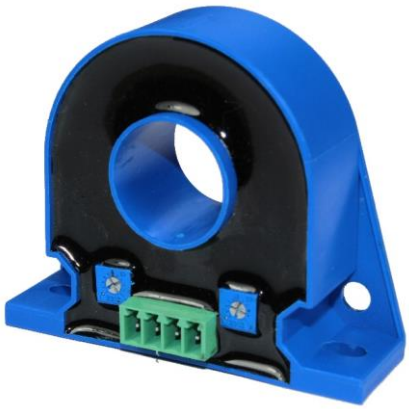

Dimensions: 68mm x 57mm x 24mm, Aperture: Ø20 mm

CONNECTIONS

The current carrying cable must pass through the window. The phase of output is the same as that of the current passing the window in the direction of the arrow indicated on the case.

Wiring of Terminals for voltage output:

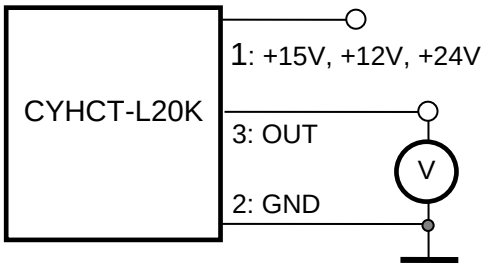

Relation between Input and Output:

Sensor CYHCT-L20K-U100A-34	
Input current (A)	Output voltage (V)
0	0
25	1.25
50	2.5
75	3.75
100	5

.

1: Power supply; 2: GND; 3: Voltage Output

Wiring of Terminals for Current Output:

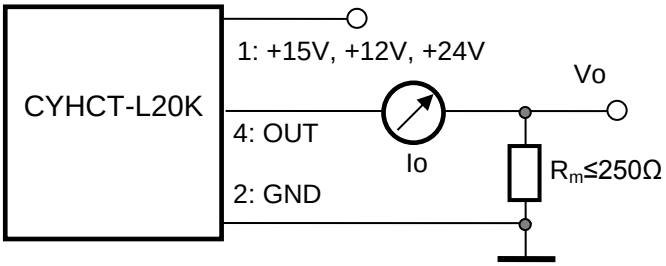

1: Power supply; 2: GND; 4: Current Output

Relation between Input and Output (for R_m=250 Ω):

Sensor CYHCT-L20K-U100A-54		
Input current (A)	Output current Io(mA)	Output voltage Vo (V)
0	4	1
25	8	2
50	12	3
75	16	4
100	20	5

Notes:

1. Connect the terminals of power source, output respectively and correctly, never make wrong connection.
2. Two potentiometers can be adjusted, only if necessary, by turning slowly to the required accuracy with a small screw driver.
3. The best accuracy can be achieved when the window is fully filled with bus-bar (current carrying conductor).
4. The in-phase output can be obtained when the direction of current of current carrying conductor is the same as the direction of arrow marked on the transducer case.

Split Core Hall Effect DC Current Sensor CYHCT-L21K

The sensor CYHCT-L21K is based on open loop principle and designed with a high galvanic isolation between primary conductor and secondary circuit. It can be used for measurement of DC current, DC pulse currents etc. The output of the transducer reflects the real wave of the current carrying conductor.

Features and Advantages	Applications
• DC current measurement • Output signal option (4-20mA, 0-5V, 0-10V) • High isolation between primary and secondary circuits • No insertion losses • Split Core, easy installation • Temperature compensation	• **Photovoltaic equipment** • Battery banks, such as, monitoring load current and charge current, verifying operation • Transportation, measuring traction power or auxiliary loads • Phase fired controlled heaters • Directly connect to PLC • Sense motor stalls and short circuits • Industrial instrumentation

.

Specifications

Rated input current (DC)	25A,30A,40A,50A,60A,70A,80A,90A,100A,200A,300A,400A,500A		
Linear measuring range	1.2 times of rated input current		
Output signals	0-5VDC, 0-10VDC, 0-20mADC, 4-20mADC		
Power supply	+12V DC, +15VDC, +24V DC		
Measuring accuracy	Voltage output: ±1.0% for 25A~49A, ±0.5% for 50A~500A 4-20mA output: ±1.0% for 25A~49A, ±0.5% for 50A~500A 0-20mA output: ±1.0% for 25A ~ 500A		
Linearity at 25°C	Voltage output: ±0.5% for 25A~49A, ±0.2% for 50A~500A 4-20mA output: ±0.5% for 25A~49A, ±0.2% for 50A~500A 0-20mA output: ±0.5% for 25A ~ 500A		
Zero offset voltage	±10mV	Hysteresis error:	±10mV
Thermal drift of offset voltage	≤300ppm/°C	Thermal Drift (-10°C to 50°C):	<1000ppm /°C
Galvanic isolation	3 kV DC, 1 min		
Isolation resistance	≥100MΩ		
Response time	<1ms DC output		
Frequency Bandwidth (-3dB)	DC – 8kHz		
di/dt following accuracy	50A/µs		
Overload capacity	5 times of rated current		
Current consumption	≤25mA for voltage output, 25mA + Output current for current output		
Output load	Voltage output : ≥2kΩ, Current output: ≤250Ω		
Mounting	Panel Screw mounting		
Case style and Window size	L21K with aperture Ø21mm		
Protection of Case	IP20		
Operating temperature	-40°C ~ +85°C	Storage temperature	-55°C ~ + 100°C
Relative humidity	≤90%		
MTBF	≥ 100k hours		

Definition of Part number:

CYHCT	-	L21K	-	M	-	x	n	C
(1)		(2)		(3)		(4)	(5)	(6)

(1)	(2)	(3)	(4)	(5)	(6)
Series name	Case style	Rated Input current (M=U/B m)	Output signal	Power supply	Connector
CYHCT	L21K	m = 25A, 30A, 40A, 50A, 60A,70A,80A,90A, 100A, 200A, 300A, 400A, 500A (other input current between 25A-500A)	**x=3:** 0-5V DC **x=4:** 0-20mA DC **x=5:** 4-20mA DC **x=8:** 0-10V DC	n**=2:** +12V DC n=**3**: +15V DC n**=4:** +24V DC	C**=M:** Molex Connector C=**P**: Phoenix Connector

U: unidirectional; B: bidirectional (please give U or B in the part number)

Example 1: CYHCT-L21K-U100A -34M, Hall Effect DC Current sensor with Molex connector
Output signal: 0-5V DC
Power supply: +24V DC
Rated input current: 0-100A DC

Example 2: CYHCT-L21K-U100A -54P, Hall Effect DC Current sensor with Phoenix connector
Output signal: 4-20mA DC
Power supply: +24V DC
Rated input current: 0-100A DC

DIMENSIONS (mm)

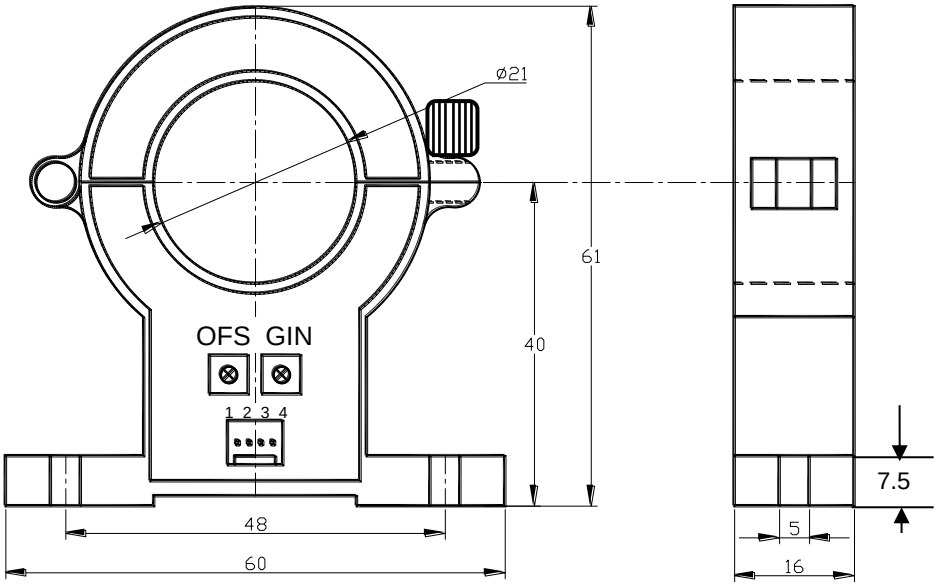

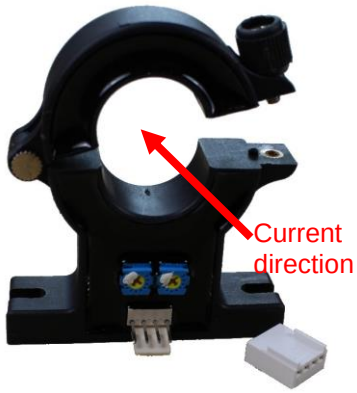

OFS: Offset Adjustment GIN: Gain Adjustment

Dimensions: 61mm x 60mm x 16mm, Aperture: Ø20 mm

Pin Arrangement

1: Vcc
2: GND
3: Signal Output
4: GND

CONNECTIONS

The current carrying cable must pass through the window. The phase of output is the same as that of the current passing the window in the direction of the arrow indicated on the case.

Wiring of Terminals for voltage output:

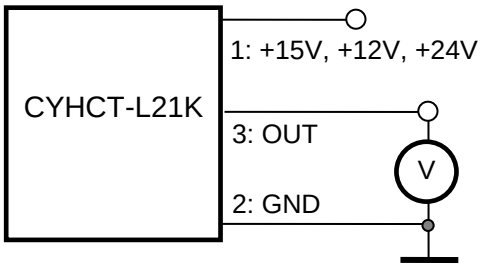

Relation between Input and Output:

Sensor CYHCT-L21K-U100A-34	
Input current (A)	Output voltage (V)
0	0
25	1.25
50	2.5
75	3.75
100	5

.

1: Power supply; 2: GND; 3: Voltage Output

Wiring of Terminals for Current Output:

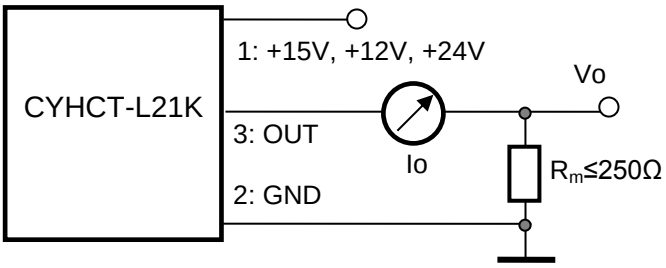

1: Power supply; 2: GND; 3: Current Output

Relation between Input and Output (for R_m=250 Ω):

Sensor CYHCT-L21K-U100A-54		
Input current (A)	Output current Io(mA)	Output voltage Vo (V)
0	4	1
25	8	2
50	12	3
75	16	4
100	20	5

Notes:

1. Connect the terminals of power source, output respectively and correctly, never make wrong connection.
2. Two potentiometers can be adjusted, only if necessary, by turning slowly to the required accuracy with a small screw driver.
3. The best accuracy can be achieved when the window is fully filled with bus-bar (current carrying conductor).
4. The in-phase output can be obtained when the direction of current of current carrying conductor is the same as the direction of arrow marked on the transducer case.

DIN Rail Adapter CY-DRA88

The DIN Rail Adapter CY-DRA88 is designed for mounting the sensor on 35mm DIN Rail. It has the size 70 x 24 x 23mm. The height from bottom to mounting surface is 14.8mm.

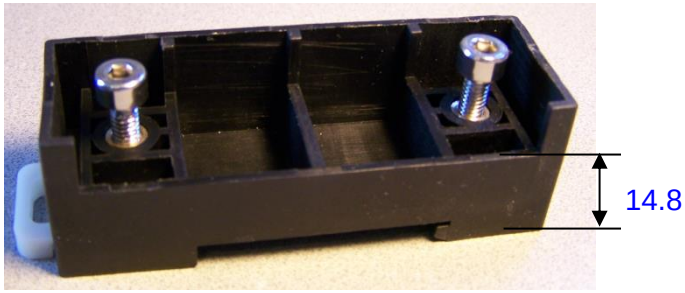

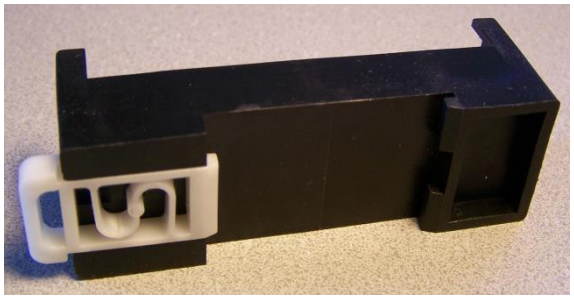

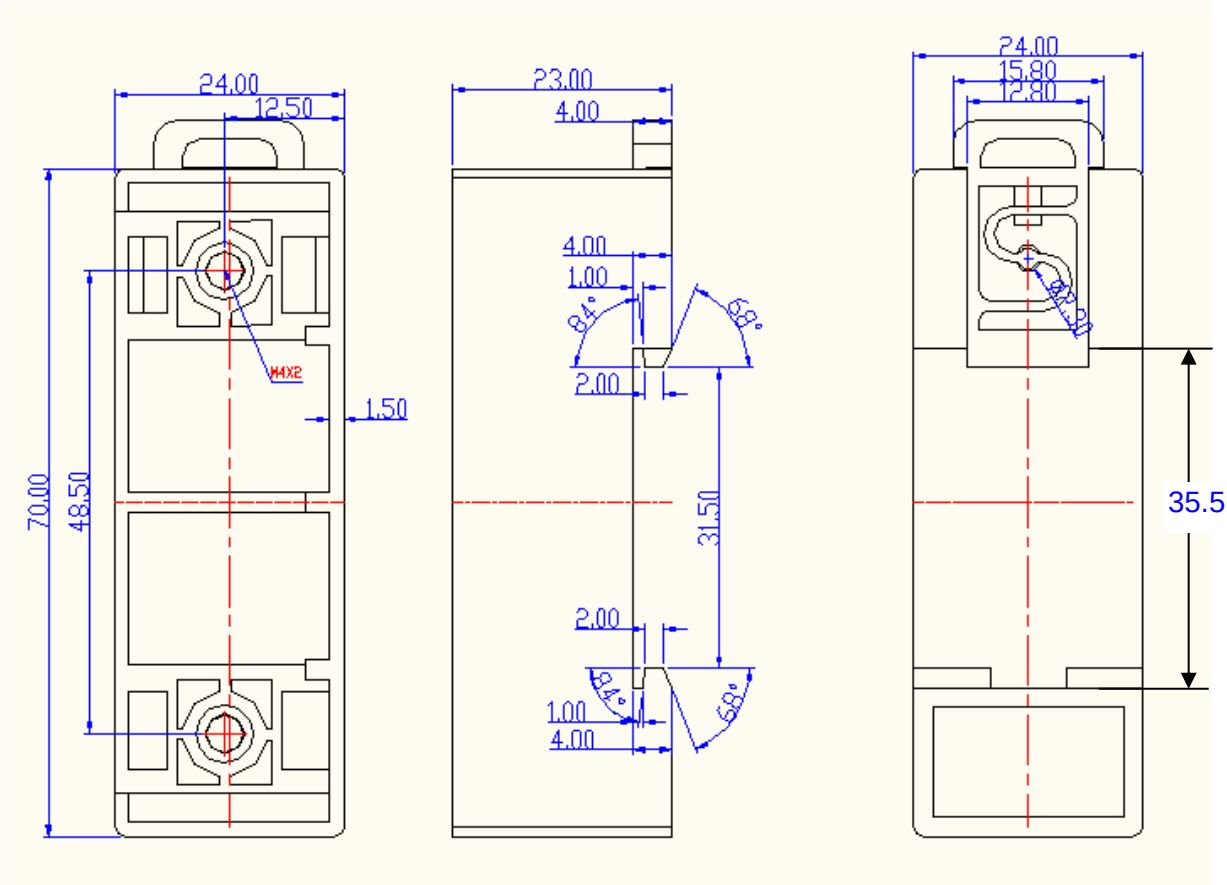

Mounting of Sensors

Sensor with Molex Connector
(The distance between the bottom und the middle of hole is 54.8mm)

Sensor with Phoenix Connector
(The distance between the bottom und the middle of hole is 54.8mm)

Hall Effect DC Current Sensor CYHCT-C1TV

This Hall Effect current sensor can be used for measurement of DC current. The output of the transducer reflects the real wave of the current carrying conductor.

Product Characteristics	Applications
• Excellent accuracy • Very good linearity • Light in weight • Less power consumption • Window structure • Electrically isolating the output of the transducer from the current carrying conductor • No insertion loss • Current overload capability	• **Photovoltaic equipment** • Frequency conversion timing equipment • Various power supply • Uninterruptible power supplies (UPS) • Electric welding machines • Numerical controlled machine tools • Electrolyzing and electroplating equipment • Electric powered locomotive • Microcomputer monitoring • Electric power network monitoring

Electrical Data/Input

Primary Nominal DC Current I_r (A)	Primary Current Measuring Range I_p(A)	DC Output Voltage (V)	Part number
25A	0 ~ ±25A	x=0: 0-4V ±1.0% x=3: 0-5V ±1.0% x=8: 0-10V ±1.0%	CYHCT-C1TV-U/B25A-xnC
30A	0 ~ ±30A		CYHCT-C1TV-U/B30A-xnC
40A	0 ~ ±40A		CYHCT-C1TV-U/B40A-xnC
50A	0 ~ ±50A		CYHCT-C1TV-U/B50A-xnC
100A	0 ~ ±100A		CYHCT-C1TV-U/B100A-xnC
200A	0 ~ ±200A		CYHCT-C1TV-U/B200A-xnC
300A	0 ~ ±300A		CYHCT-C1TV-U/B300A-xnC
400A	0 ~ ±400A		CYHCT-C1TV-U/B400A-xnC
500A	0 ~ ±500A		CYHCT-C1TV-U/B500A-xnC
600A	0 ~ ±600A		CYHCT-C1TV-U/B600A-xnC

(n=2, *Vcc*= +12VDC; n=3, *Vcc* =+15VDC; n=4, *Vcc* =+24VDC, U: unidirectional, B: bidirectional)
(Connector: Molex connector C=M; Phoenix Connector: C=P)

Supply Voltage:	V_{cc}=+12V, +15V, +24V± 5%
Current Consumption	I_c < 25mA
Isolation Voltage	2.5kV, 50/60Hz, 1min

Electrical Data/Output

Output Voltage at I_r, T_A=25°C:	V_{out} =0- 4V, 0-5V, 0-10VDC
Output Impedance:	R_{out} < 150Ω
Load Resistor:	R_L > 10kΩ
Accuracy at I_r, T_A=25°C,	X <1.0% FS
Linearity from 0 to I_r, T_A=25°C,	E_L <1.0% FS
Electric Offset Voltage, T_A=25°C,	V_{oe} <50mV
Magnetic Offset Voltage (I_r →0)	V_{om} <±20mV
Thermal Drift of Offset Voltage,	V_{ot} <±1.0mV/°C
Thermal Drift (-10°C to 50°C),	T.C. < ±0.1% /°C
Response Time at 90% of I_P (f=1k Hz)	t_r < 1ms

Frequency Bandwidth (-3dB),	f_b = DC - 20 kHz
Case Material:	PBT, heat resistant 100°C flame retardant

General Data

Ambient Operating Temperature,	T_A = -25°C ~ +85°C
Ambient Storage Temperature,	T_S =-40°C ~ +100°C

PIN Definition and Dimensions

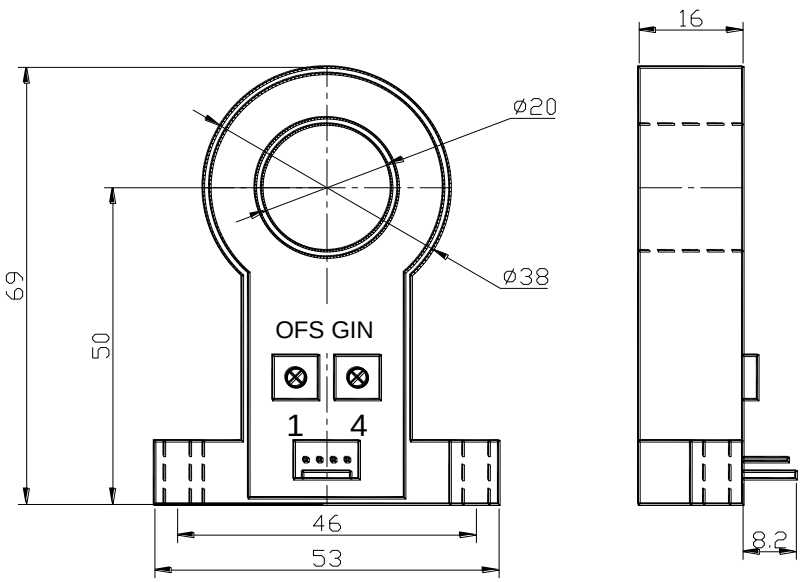

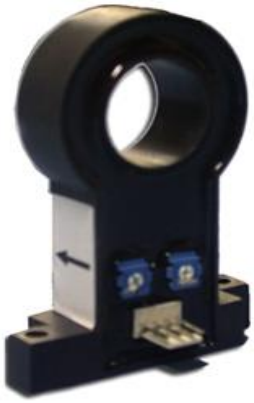

1(+): Vcc
2(G): 0V (GND)
3(O): Output
4(G): 0V GND

OFS: Offset Adjustment GIN: Gain Adjustment

Connection

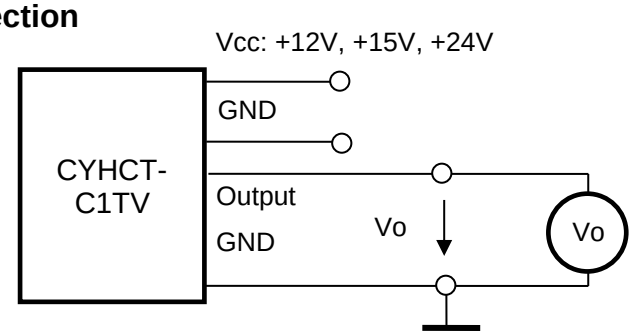

Notes:

1. Connect the terminals of power source, output respectively and correctly, never make wrong connection.
2. Two potentiometers can be adjusted, only if necessary, by turning slowly to the required accuracy with a small screwdriver.
3. The best accuracy can be achieved when the window is fully filled with bus-bar (current carrying conductor).
4. The in-phase output can be obtained when the direction of current of current carrying conductor is the same as the direction of arrow marked on the transducer

Hall Effect DC Current Sensor CYHCT-C1TC

This Hall Effect current sensor is based on open loop principle and designed with a solid core and a high galvanic isolation between primary conductor and secondary circuit. It can be used for measurement of DC current etc. The output of the transducer reflects the real wave of the current carrying conductor.

Product Characteristics	Applications
• Excellent accuracy • Very good linearity • Using split cores and easy mounting • Less power consumption • Window structure • Electrically isolating the output of the transducer from the current carrying conductor • No insertion loss • Current overload capability	• **Photovoltaic equipment** • Frequency conversion timing equipment • Various power supply • Uninterruptible power supplies (UPS) • Electric welding machines • Transformer substation • Numerical controlled machine tools • Electric powered locomotive • Microcomputer monitoring • Electric power network monitoring

Electrical Data

Primary Nominal DC Current I_r (A)	Measuring Range (A)	DC Output Current (mA)	Part number
25	0 ~ ±25A	4-20 ±1.0%	CYHCT-C1TC-U/B25A-nC
30	0 ~ ±30A		CYHCT-C1TC-U/B30A-nC
40	0 ~ ±40A		CYHCT-C1TC-U/B40A-nC
50	0 ~ ±50A		CYHCT-C1TC-U/B50A-nC
100	0 ~ ±100A		CYHCT-C1TC-U/B100A-nC
200	0 ~ ±200A		CYHCT-C1TC-U/B200A-nC
300	0 ~ ±300A		CYHCT-C1TC-U/B300A-nC
400	0 ~ ±400A		CYHCT-C1TC-U/B400A-nC
500	0 ~ ±500A		CYHCT-C1TC-U/B500A-nC
600	0 ~ ±600A		CYHCT-C1TC-U/B600A-nC

(U: unidirectional input current; B: bidirectional input current, please give U or B in Part number)
(n=3, *Vcc*= +12VDC ±5%; n=4, *Vcc* =+15VDC ±5%; n=5, *Vcc* =+24VDC±5%)
(Connector: Molex connector C=M; Phoenix Connector: C=P)

Supply Voltage	V_{cc}=+12V, +15V, +24V± 5%
Current Consumption	I_c < 25mA + Output current
Galvanic isolation, 50/60Hz, 1min:	2.5kV
Isolation resistance @ 500 VDC	> 500 MΩ

Accuracy and Dynamic performance data

Accuracy at I_r, T_A=25°C	<1.0% FS
Linearity from 0 to I_r, T_A=25°C,	E_L <1.0% FS
Electric Offset Current, T_A=25°C,	4mA DC or 12mA DC
Thermal Drift of Offset Current,	<±0.005mA/°C
Response Time at 90% of I_P	t_r < 1ms
Load resistance:	80-450Ω
Frequency Bandwidth (-3dB),	f_b = DC - 20 kHz
Case Material:	PBT, heat resistant 125°C flame retardant

General Data

Ambient Operating Temperature,	T_A = -25°C ~ +85°C
Ambient Storage Temperature,	T_S = -40°C ~ +100°C

PIN Definition and Dimensions

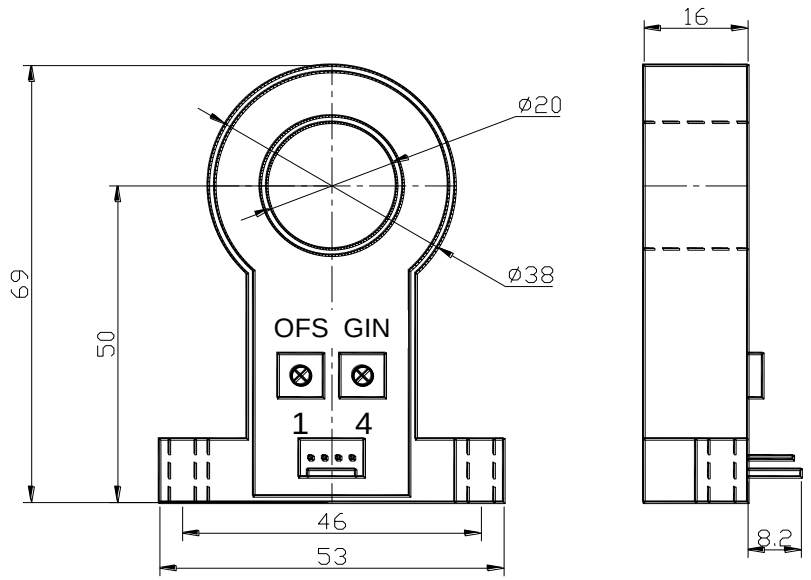

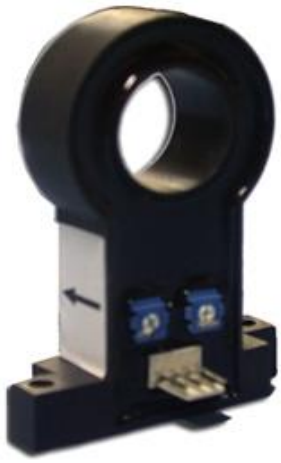

1(+): Vcc
2(G): GND
3(O): Output
4(G): GND

OFS: Offset Adjustment GIN: Gain Adjustment

Connection

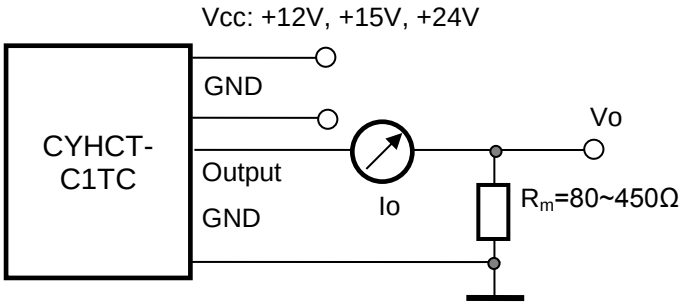

Notes:

1. Connect the terminals of power source, output respectively and correctly, never make wrong connection.
2. Two potentiometers can be adjusted, only if necessary, by turning slowly to the required accuracy with a small screwdriver.
3. The best accuracy can be achieved when the window is fully filled with bus-bar (current carrying conductor).
4. The in-phase output can be obtained when the direction of current of current carrying conductor is the same as the direction of arrow marked on the transducer

Split Core Hall Effect DC Current Sensor CYHCT-C2TV

This Hall Effect current sensor is based on open loop principle and designed with a split core and a high galvanic isolation between primary conductor and secondary circuit. It can be used for measurement of DC current etc. The output of the transducer reflects the real wave of the current carrying conductor.

Product Characteristics	Applications
• Excellent accuracy • Very good linearity • Light in weight • Less power consumption • Window structure • Electrically isolating the output of the transducer from the current carrying conductor • No insertion loss • Current overload capability	• **Photovoltaic equipment** • Frequency conversion timing equipment • Various power supply • Uninterruptible power supplies (UPS) • Electric welding machines • Numerical controlled machine tools • Electrolyzing and electroplating equipment • Electric powered locomotive • Microcomputer monitoring • Electric power network monitoring

Electrical Data/Input

Primary Nominal DC Current I_r (A)	Primary Current Measuring Range I_p(A)	DC Output Voltage (V)	Part number
25A	0 ~ ±25A	x=0: 0-4V ±1.0% x=3: 0-5V ±1.0% x=8: 0-10V ±1.0%	CYHCT-C2TV-U/B25A-xnC
30A	0 ~ ±30A		CYHCT-C2TV-U/B30A-xnC
40A	0 ~ ±40A		CYHCT-C2TV-U/B40A-xnC
50A	0 ~ ±50A		CYHCT-C2TV-U/B50A-xnC
100A	0 ~ ±100A		CYHCT-C2TV-U/B100A-xnC
200A	0 ~ ±200A		CYHCT-C2TV-U/B200A-xnC
300A	0 ~ ±300A		CYHCT-C2TV-U/B300A-xnC
400A	0 ~ ±400A		CYHCT-C2TV-U/B400A-xnC
500A	0 ~ ±500A		CYHCT-C2TV-U/B500A-xnC
600A	0 ~ ±600A		CYHCT-C2TV-U/B600A-xnC

(n=2, *Vcc*= +12VDC; n=3, *Vcc* =+15VDC; n=4, *Vcc* =+24VDC, U: unidirectional, B: bidirectional)
(Connector: Molex connector C=M; Phoenix Connector: C=P)

Supply Voltage:	V_{cc}=+12V, +15V, +24V± 5%
Current Consumption	I_c < 25mA
Isolation Voltage	2.5kV, 50/60Hz, 1min
Output Voltage at I_r, T_A=25°C:	V_{out} =0- 4V, 0-5V, 0-10VDC
Output Impedance:	R_{out} < 150Ω
Load Resistor:	R_L > 10kΩ

Accuracy

Accuracy at I_r, T_A=25°C,	X <1.0% FS
Linearity from 0 to I_r, T_A=25°C,	E_L <1.0% FS
Electric Offset Voltage, T_A=25°C,	V_{oe} <50mV
Magnetic Offset Voltage (I_r →0)	V_{om} <±20mV
Thermal Drift of Offset Voltage,	V_{ot} <±1.0mV/°C
Thermal Drift (-10°C to 50°C),	T.C. < ±0.1% /°C
Response Time at 90% of I_P (f=1k Hz)	t_r < 1ms
Frequency Bandwidth (-3dB),	f_b = DC - 20 kHz

Case Material:	PBT
Ambient Operating Temperature,	T_A = -25°C ~ +85°C
Ambient Storage Temperature,	T_S =-40°C ~ +100°C

PIN Definition and Dimensions

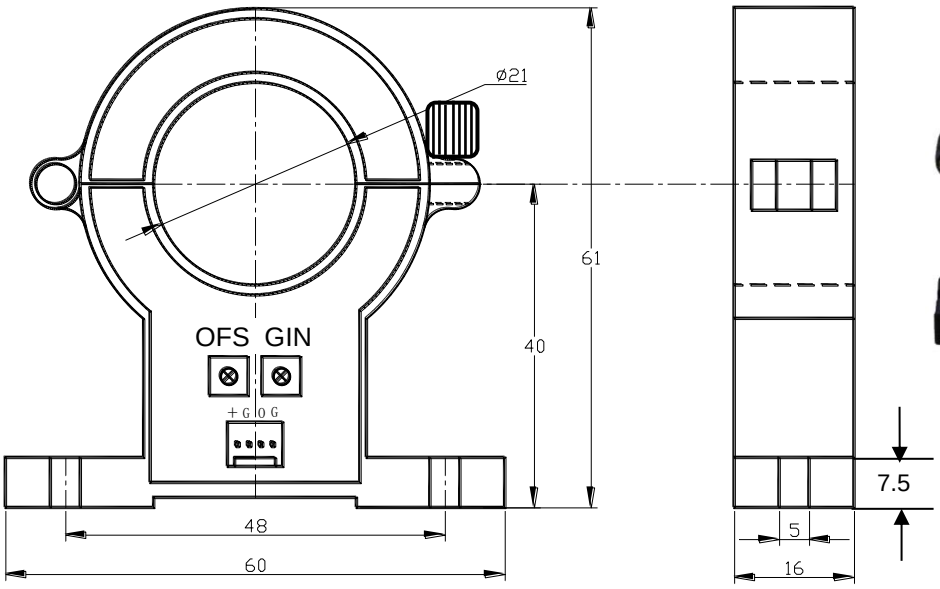

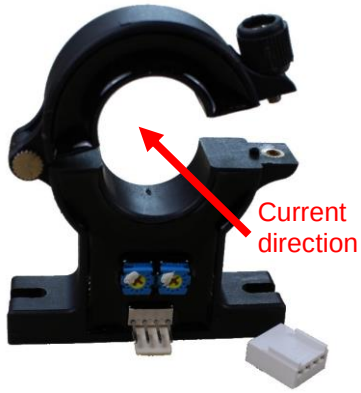

1(+):	Vcc
2(G):	GND
3(O):	Output
4(G):	GND

OFS: Offset Adjustment GIN: Gain Adjustment

Connection

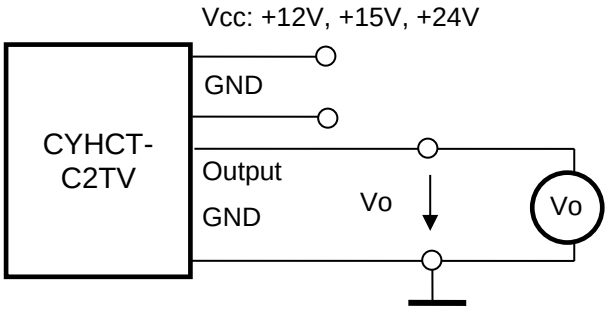

Notes:

1. Connect the terminals of power source, output respectively and correctly, never make wrong connection.
2. Two potentiometers can be adjusted, only if necessary, by turning slowly to the required accuracy with a small screwdriver.
3. The best accuracy can be achieved when the window is fully filled with bus-bar (current carrying conductor).
4. The in-phase output can be obtained when the direction of current of current carrying conductor is the same as the direction of arrow marked on the transducer

DIN Rail Adapter CY-DRA88

The DIN Rail Adapter CY-DRA88 is designed for mounting the sensor on 35mm DIN Rail. It has the size 70 x 24 x 23mm. The height from bottom to mounting surface is 14.8mm.

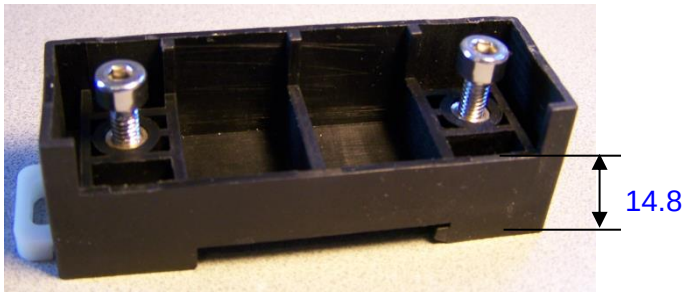

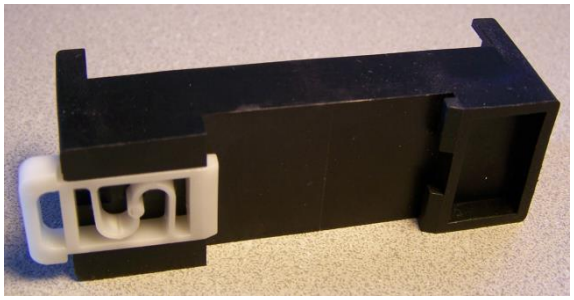

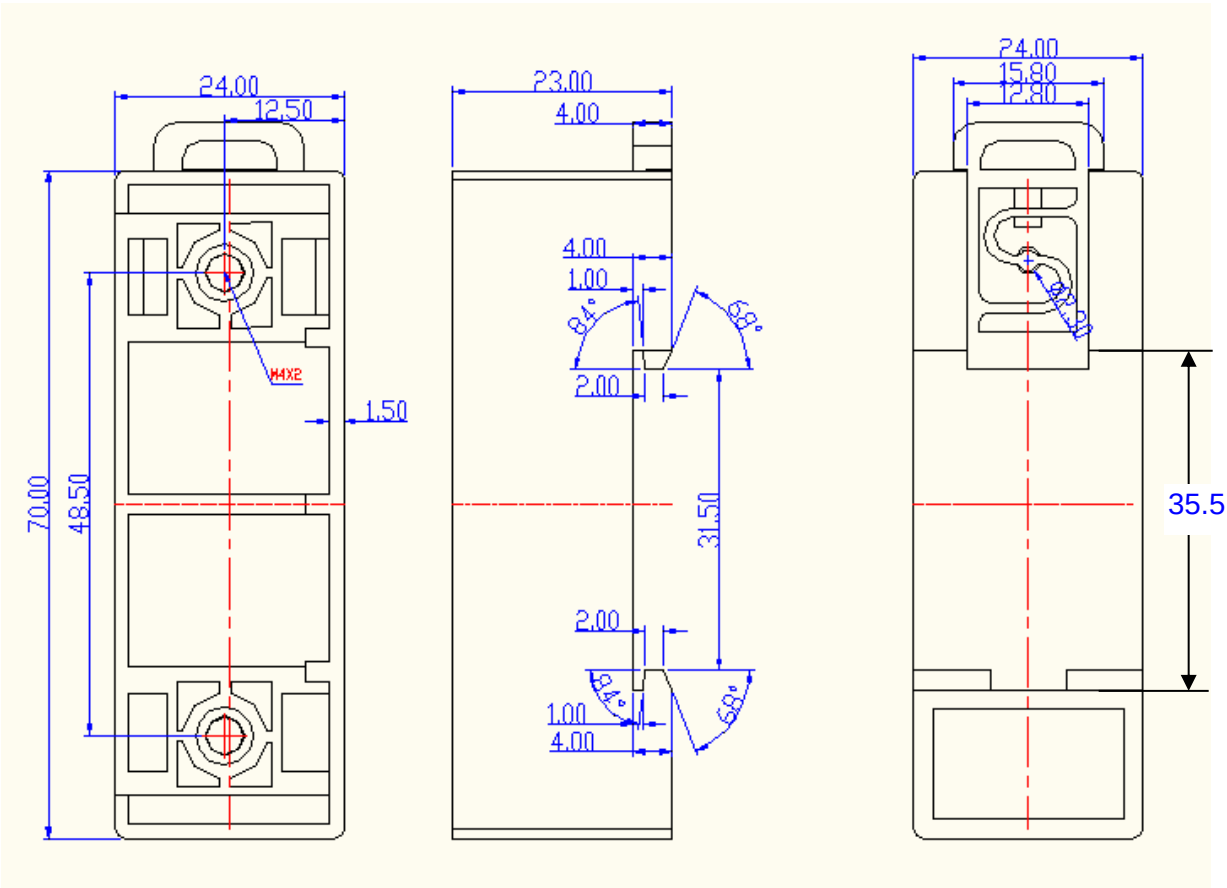

Mounting of Sensors

Sensor with Molex Connector
(The distance between the bottom und the middle of hole is 54.8mm)

Sensor with Phoenix Connector
(The distance between the bottom und the middle of hole is 54.8mm)

Split Core Hall Effect DC Current Sensor CYHCT-C2TC

This Hall Effect current sensor is based on open loop principle and designed with a split core and a high galvanic isolation between primary conductor and secondary circuit. It can be used for measurement of DC current etc. The output of the transducer reflects the real wave of the current carrying conductor.

Product Characteristics	Applications
• Excellent accuracy • Very good linearity • Using split cores and easy mounting • Less power consumption • Split core Window structure • Electrically isolating the output of the transducer from the current carrying conductor • No insertion loss • High Current overload capability	• **Photovoltaic equipment** • Frequency conversion timing equipment • Various power supply • Uninterruptible power supplies (UPS) • Electric welding machines • Transformer substation • Numerical controlled machine tools • Electric powered locomotive • Microcomputer monitoring • Electric power network monitoring

Electrical Data

Primary Nominal DC Current I_r (A)	Measuring Range (A)	DC Output Current (mA)	Part number
25	0 ~ ±25A	4-20 ±1.0%	CYHCT-C2TC-U/B25A-nC
30	0 ~ ±30A		CYHCT-C2TC-U/B30A-nC
40	0 ~ ±40A		CYHCT-C2TC-U/B40A-nC
50	0 ~ ±50A		CYHCT-C2TC-U/B50A-nC
100	0 ~ ±100A		CYHCT-C2TC-U/B100A-nC
200	0 ~ ±200A		CYHCT-C2TC-U/B200A-nC
300	0 ~ ±300A		CYHCT-C2TC-U/B300A-nC
400	0 ~ ±400A		CYHCT-C2TC-U/B400A-nC
500	0 ~ ±500A		CYHCT-C2TC-U/B500A-nC
600	0 ~ ±600A		CYHCT-C2TC-U/B600A-nC

(U: unidirectional input current; B: bidirectional input current, please give U or B in Part number)
(n=3, *Vcc*= +12VDC ±5%; n=4, *Vcc* =+15VDC ±5%; n=5, *Vcc* =+24VDC±5%)
(Connector: Molex connector C=M; Phoenix Connector: C=P)

Supply Voltage	V_{cc}=+12V, +15V, +24VDC ± 5%
Current Consumption	I_c < 25mA + Output current
Galvanic isolation, 50/60Hz, 1min:	2.5kV
Isolation resistance @ 500 VDC	> 500 MΩ

Accuracy and Dynamic performance data

Accuracy at I_r, T_A=25°C,	<1.0% FS
Linearity from 0 to I_r, T_A=25°C,	E_L <1.0% FS
Electric Offset Current, T_A=25°C,	4mA DC or 12mA DC
Thermal Drift of Offset current,	<±0.005mA/°C
Response Time at 90% of I_P	t_r < 1ms
Load resistance:	80-450Ω
Frequency Bandwidth (-3dB),	f_b = DC - 20 kHz
Case Material:	PBT

General Data

Ambient Operating Temperature,	T_A = -25°C ~ +85°C
Ambient Storage Temperature,	T_S =-40°C ~ +100°C

PIN Definition and Dimensions

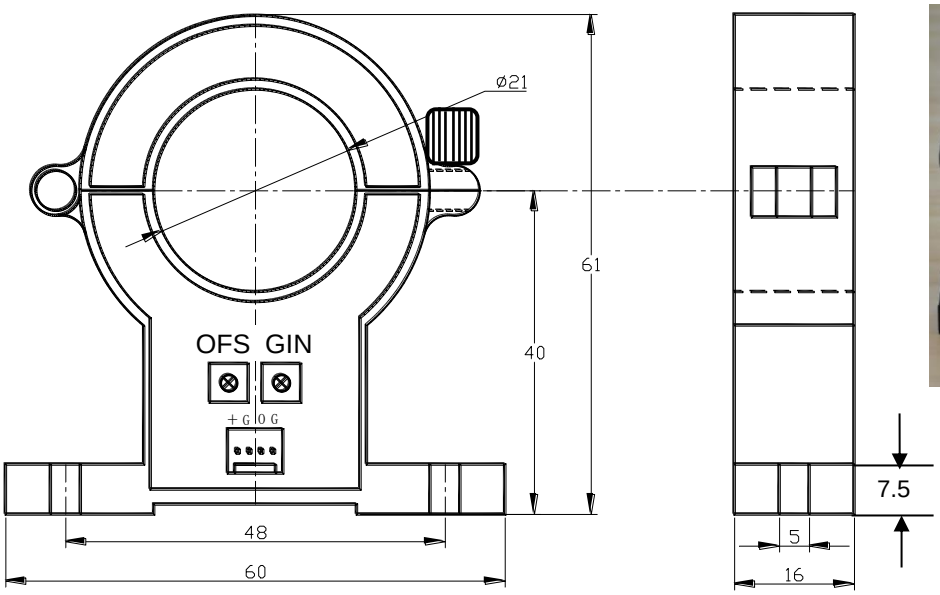

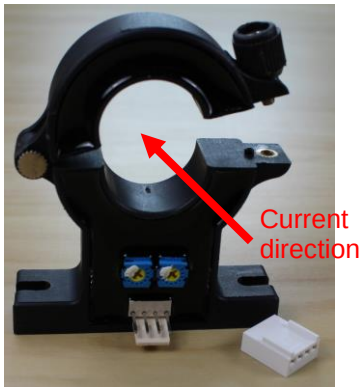

1(+): Vcc
2(G): GND
3(O): Output
4(G): GND

OFS: Offset Adjustment GIN: Gain Adjustment

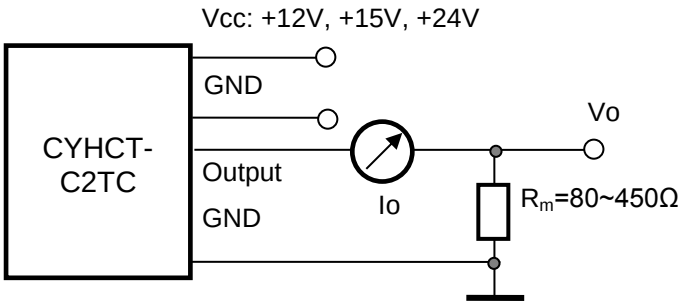

Notes:

1. Connect the terminals of power source, output respectively and correctly, never make wrong connection.
2. Two potentiometers can be adjusted, only if necessary, by turning slowly to the required accuracy with a small screwdriver.
3. The best accuracy can be achieved when the window is fully filled with bus-bar (current carrying conductor).
4. The in-phase output can be obtained when the direction of current of current carrying conductor is the same as the direction of arrow marked on the transducer

DIN Rail Adapter CY-DRA88

The DIN Rail Adapter CY-DRA88 is designed for mounting the sensor on 35mm DIN Rail. It has the size 70 x 24 x 23mm. The height from bottom to mounting surface is 14.8mm.

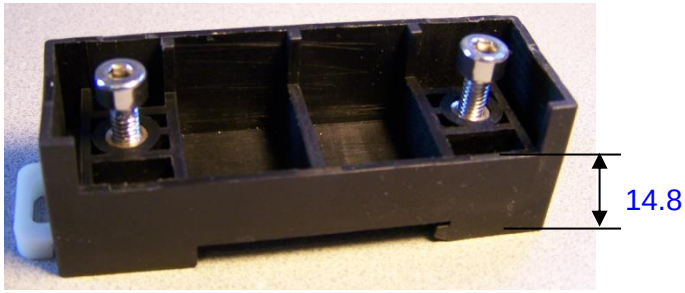

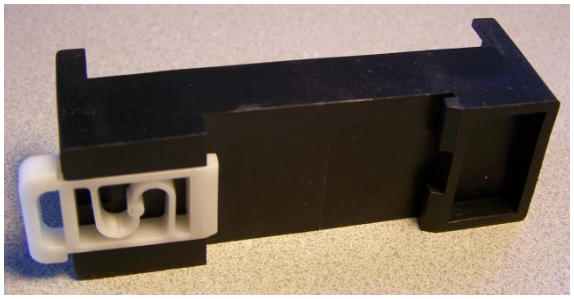

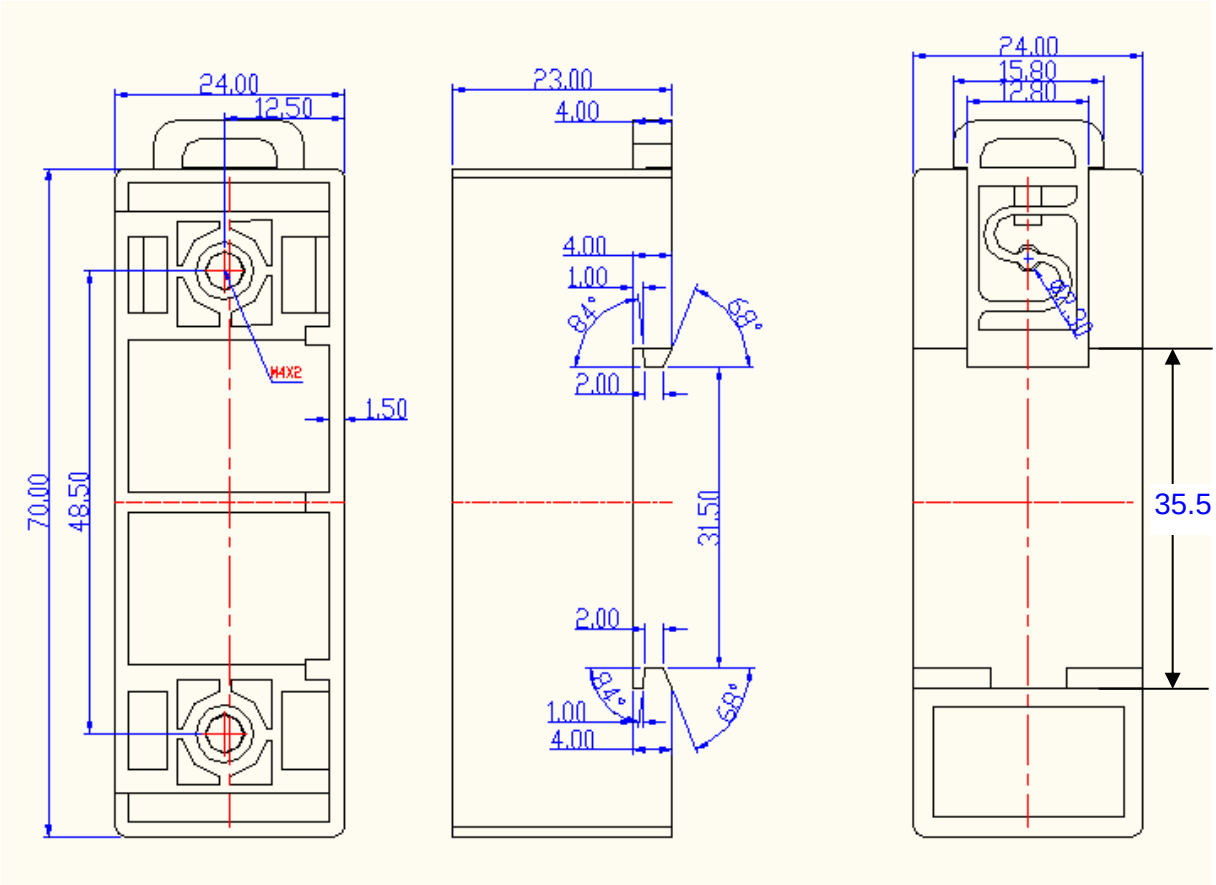

Mounting of Sensors

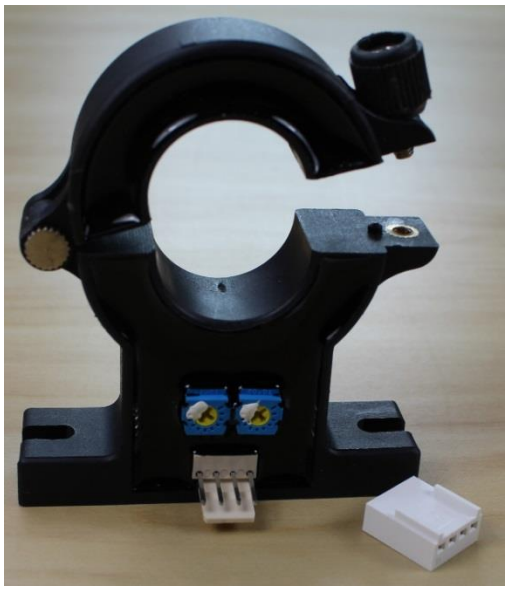

Sensor with Molex Connector
(The distance between the bottom und the middle of hole is 54.8mm)

Sensor with Phoenix Connector
(The distance between the bottom und the middle of hole is 54.8mm)

Hall Effect DC Current Sensor CYHCT-C4TV

This Hall Effect current sensor is based on open loop principle and designed with a solid core and a high galvanic isolation between primary conductor and secondary circuit. It can be used for measurement of DC current etc. The output of the transducer reflects the real wave of the current carrying conductor.

Product Characteristics	Applications
• Excellent accuracy • Very good linearity • Light in weight • Less power consumption • Window structure • Electrically isolating the output of the transducer from the current carrying conductor • No insertion loss • Current overload capability	• **Photovoltaic equipment** • Frequency conversion timing equipment • Various power supply • Uninterruptible power supplies (UPS) • Electric welding machines • Numerical controlled machine tools • Electrolyzing and electroplating equipments • Electric powered locomotive • Microcomputer monitoring • Electric power network monitoring

Electrical Data/Input

Primary Nominal DC Current I_r (A)	Primary Current Measuring Range I_p(A)	DC Output Voltage (V)	Part number
50A	0 ~ ±50A	x=0: 0-4V ±1.0% x=3: 0-5V ±1.0% x=8: 0-10V ±1.0%	CYHCT-C4TV-U/B50A-xn
100A	0 ~ ±100A		CYHCT-C4TV-U/B100A-xn
200A	0 ~ ±200A		CYHCT-C4TV-U/B200A-xn
300A	0 ~ ±300A		CYHCT-C4TV-U/B300A-xn
400A	0 ~ ±400A		CYHCT-C4TV-U/B400A-xn
500A	0 ~ ±500A		CYHCT-C4TV-U/B500A-xn
600A	0 ~ ±600A		CYHCT-C4TV-U/B600A-xn
700A	0 ~ ±700A		CYHCT-C4TV-U/B700A-xn
800A	0 ~ ±800A		CYHCT-C4TV-U/B800A-xn
1000A	0 ~ ±1000A		CYHCT-C4TV-U/B1000A-xn

(n=2, *Vcc*= +12VDC; n=3, *Vcc* =+15VDC; n=4, *Vcc* =+24VDC, U: unidirectional, B: bidirectional)

Supply Voltage:	V_{cc}=+12V, +15V, +24V± 5%
Current Consumption	I_c < 25mA
Isolation Voltage	2.5kV, 50/60Hz, 1min
Output Voltage at I_r, T_A=25°C:	V_{out} =0- 4V, 0-5V, 0-10VDC
Output Impedance:	R_{out} < 150Ω
Load Resistor:	R_L > 10kΩ

Accuracy

Accuracy at I_r, T_A=25°C,	X <1.0% FS
Linearity from 0 to I_r, T_A=25°C,	E_L <1.0% FS
Electric Offset Voltage, T_A=25°C,	V_{oe} <50mV
Magnetic Offset Voltage (I_r →0)	V_{om} <±20mV
Thermal Drift of Offset Voltage,	V_{ot} <±1.0mV/°C
Thermal Drift (-10°C to 50°C),	T.C. < ±0.1% /°C
Response Time at 90% of I_P (f=1k Hz)	t_r < 1ms
Frequency Bandwidth (-3dB),	f_b = DC - 20 kHz
Case Material:	PBT

General Data

Ambient Operating Temperature,	T_A = -25°C ~ +85°C
Ambient Storage Temperature,	T_S =-40°C ~ +100°C

PIN Definition and Dimensions

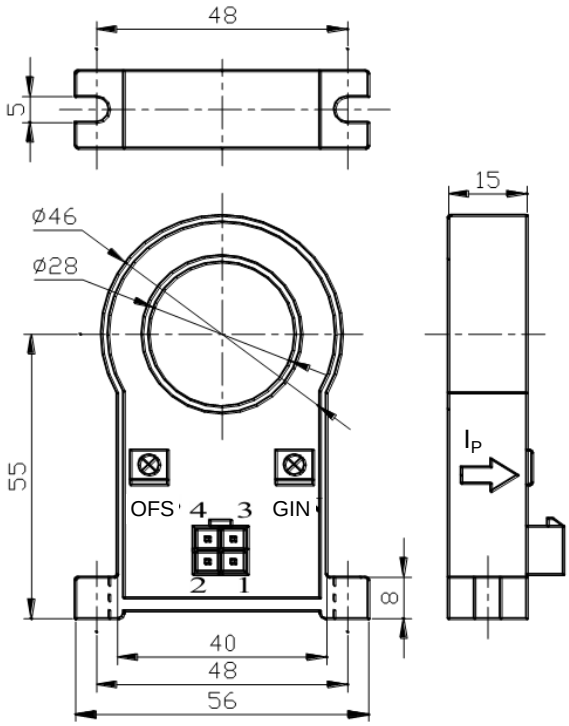

1(G): GND
2(G): GND
3(O): Output
4(+): Vcc

OFS: Offset Adjustment
GIN: Gain Adjustment

Connection

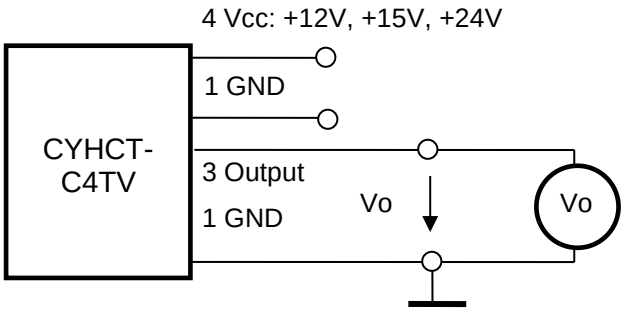

Notes:

1. Connect the terminals of power source, output respectively and correctly, never make wrong connection.
2. Two potentiometers can be adjusted, only if necessary, by turning slowly to the required accuracy with a small screwdriver.
3. The best accuracy can be achieved when the window is fully filled with bus-bar (current carrying conductor).
4. The in-phase output can be obtained when the direction of current of current carrying conductor is the same as the direction of arrow marked on the transducer

Hall Effect DC Current Sensor CYHCT-C4TC

This Hall Effect current sensor is based on open loop principle and designed with a solid core and a high galvanic isolation between primary conductor and secondary circuit. It can be used for measurement of DC current etc. The output of the transducer reflects the real wave of the current carrying conductor.

Product Characteristics	Applications
• Excellent accuracy • Very good linearity • Less power consumption • Window structure • Electrically isolating the output of the transducer from the current carrying conductor • No insertion loss • Current overload capability	• **Photovoltaic equipment** • Frequency conversion timing equipment • Various power supply • Uninterruptible power supplies (UPS) • Electric welding machines • Transformer substation • Numerical controlled machine tools • Electric powered locomotive • Microcomputer monitoring • Electric power network monitoring

Electrical Data

Primary Nominal DC Current I_r (A)	Measuring Range (A)	DC Output Current (mA)	Part number
50A	0 ~ ±50A	4-20 ±1.0%	CYHCT-C4TC-U/B50A-n
100A	0 ~ ±100A		CYHCT-C4TC-U/B100A-n
200A	0 ~ ±200A		CYHCT-C4TC-U/B200A-n
300A	0 ~ ±300A		CYHCT-C4TC-U/B300A-n
400A	0 ~ ±400A		CYHCT-C4TC-U/B400A-n
500A	0 ~ ±500A		CYHCT-C4TC-U/B500A-n
600A	0 ~ ±600A		CYHCT-C4TC-U/B600A-n
700A	0 ~ ±700A		CYHCT-C4TC-U/B700A-n
800A	0 ~ ±800A		CYHCT-C4TC-U/B800A-n
1000A	0 ~ ±1000A		CYHCT-C4TC-U/B1000A-n

(U: unidirectional input current; B: bidirectional input current, please give U or B in Part number)
(n=3, *Vcc*= +12VDC ±5%; n=4, *Vcc* =+15VDC ±5%; n=5, *Vcc* =+24VDC±5%)

Supply Voltage	V_{cc}=+12V, +15V, +24VDC ± 5%
Current Consumption	I_c < 25mA + Output current
Galvanic isolation, 50/60Hz, 1min:	2.5kV
Isolation resistance @ 500 VDC	> 500 MΩ

Accuracy and Dynamic performance data

Accuracy at I_r, T_A=25°C,	<1.0% FS
Linearity from 0 to I_r, T_A=25°C,	E_L <1.0% FS
Electric Offset Current, T_A=25°C,	4mA DC or 12mA DC
Thermal Drift of Offset current,	<±0.005mA/°C
Response Time at 90% of I_P	t_r < 1ms
Load resistance:	80-450Ω
Frequency Bandwidth (-3dB),	f_b = DC - 20 kHz
Case Material:	PBT

General Data

Ambient Operating Temperature,	T_A = -25°C ~ +85°C
Ambient Storage Temperature,	T_S =-40°C ~ +100°C

PIN Definition and Dimensions

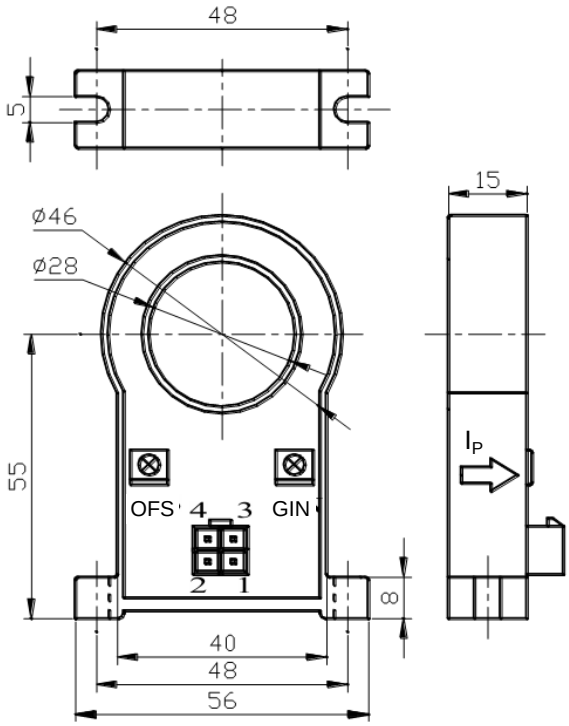

1(G): GND
2(N): GND
3(O): Output
4(+): Vcc

OFS: Offset Adjustment
GIN: Gain Adjustment

Connection

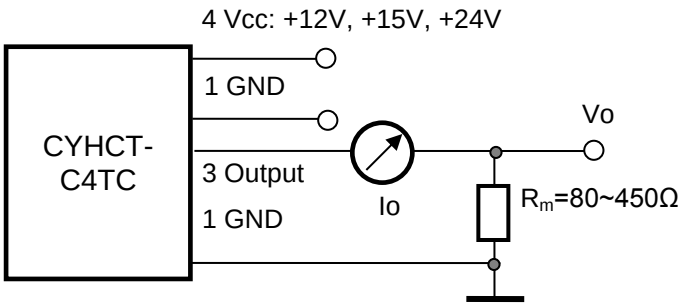

Notes:

1. Connect the terminals of power source, output respectively and correctly, never make wrong connection.
2. Two potentiometers can be adjusted, only if necessary, by turning slowly to the required accuracy with a small screwdriver.
3. The best accuracy can be achieved when the window is fully filled with bus-bar (current carrying conductor).
4. The in-phase output can be obtained when the direction of current of current carrying conductor is the same as the direction of arrow marked on the transducer

Split Core Hall Effect DC Current Sensor CYHCT-L35K

The sensor CYHCT-L35K is based on open loop principle and designed with a high galvanic isolation between primary conductor and secondary circuit. It can be used for measurement of DC current, DC pulse currents etc. The output of the transducer reflects the real wave of the current carrying conductor.

Features and Advantages	Applications
• DC current measurement • Output signal option (4-20mA, 0-5V, 0-10V) • High isolation between primary and secondary circuits • Split Core, easy installation • Protection against overvoltage • Protection against reversed polarity • Output protection against electrical disturbances	• **Photovoltaic equipment** • Battery banks, such as, monitoring load current and charge current, verifying operation • Transportation, measuring traction power or auxiliary loads • Phase fired controlled heaters • Directly connect to PLC • Sense motor stalls and short circuits • Industrial instrumentation

Specifications

Rated input current (DC)	50A,60A,70A,80A,90A,100A,200A,300A,400A,500A,800A,1000A		
Linear measuring range	1.2 times of rated input current		
Output signals	0-5VDC, 0-10VDC, 0-20mADC, 4-20mADC		
Power supply	+12V DC, +15VDC, +24V DC		
Measuring accuracy	Voltage output: ±1.0% for 50A~199A, ±0.5% for 200A~1000A 4-20mA output: ±1.0% for 50A~199A, ±0.5% for 200A~1000A 0-20mA output: ±1.0% for 50A ~ 1000A		
Linearity at 25°C	Voltage output: ±0.5% for 50A~199A, ±0.2% for 200A~1000A 4-20mA output: ±0.5% for 50A~199A, ±0.2% for 200A~1000A 0-20mA output: ±0.5% for 50A ~ 1000A		
Zero offset voltage	±10mV	Hysteresis error:	±10mV
Thermal drift of offset voltage	≤300ppm/°C	Thermal Drift (-10°C to 50°C):	<1000ppm /°C
Galvanic isolation	3 kV DC, 1 min		
Isolation resistance	≥100MΩ		
Response time	<1ms DC output		
Frequency Bandwidth (-3dB)	DC – 8kHz		
di/dt following accuracy	50A/µs		
Overload capacity	5 times of rated current		
Current consumption	≤25mA for voltage output, 25mA + Output current for current output		
Output load	Voltage output : ≥2kΩ, Current output: ≤250Ω		
Mounting	Panel Screw mounting		
Case style and Window size	L35K with aperture Ø35mm		
Protection of Case	IP20		
Operating temperature	-40°C ~ +70°C	Storage temperature	-40°C ~ + 85°C
Relative humidity	≤90%		
MTBF	≥ 100k hours		

Definition of Part number:

CYHCT	-	L35K	-	M	-	x	n	C
(1)		(2)		(3)		(4)	(5)	(6)

(1)	(2)	(3)	(4)	(5)	(6)
Series name	Case style	Rated Input current (M=U/B m)	Output signal	Power supply	Connector
CYHCT	L35K	m = 50A, 60A,70A,80A, 90A, 100A, 200A, 300A, 400A, 500A, 800A,1000A (other input current between 50A-1000A)	**x=3:** 0-5V DC **x=4:** 0-20mA DC **x=5:** 4-20mA DC **x=8:** 0-10V DC	n**=2:** +12V DC n=**3**: +15V DC n**=4:** +24V DC	C**=M:** Molex Connector C=**P**: Phoenix Connector

U: unidirectional; B: bidirectional (please give U or B in the part number)

Example 1: CYHCT-L35K-U100A -34M, Hall Effect DC Current sensor with Molex connector
Output signal: 0-5V DC
Power supply: +24V DC
Rated input current: 0-100A DC

Example 2: CYHCT-L35K-U100A -54P, Hall Effect DC Current sensor with Phoenix connector
Output signal: 4-20mA DC
Power supply: +24V DC
Rated input current: 0-100A DC

DIMENSIONS (mm)

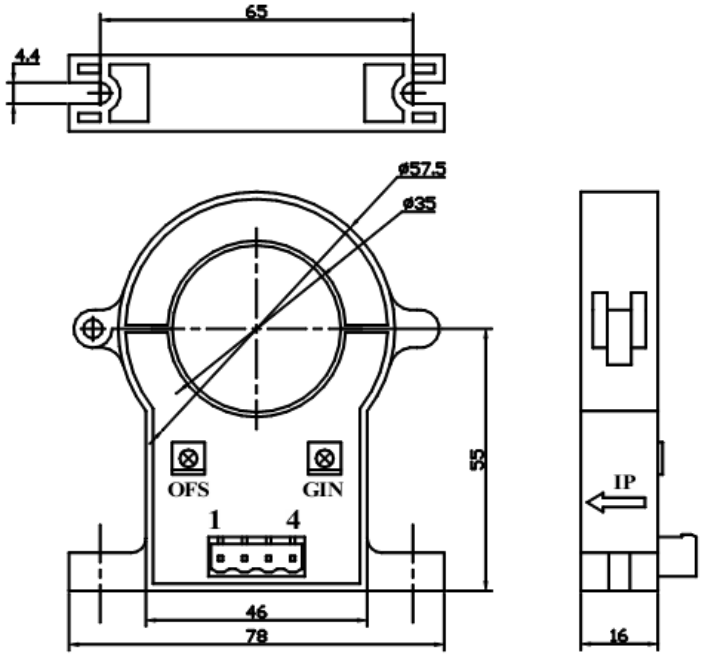

OFS: Offset Adjustment GIN: Gain Adjustment
Dimensions: 83.75mm x 78mm x 16mm, Aperture: Ø35 mm

Pin Arrangement

1:	Vcc	2:	GND
3:	Signal Output	4:	GND

CONNECTIONS

The current carrying cable must pass through the window. The phase of output is the same as that of the current passing the window in the direction of the arrow indicated on the case.

Wiring of Terminals for voltage output:

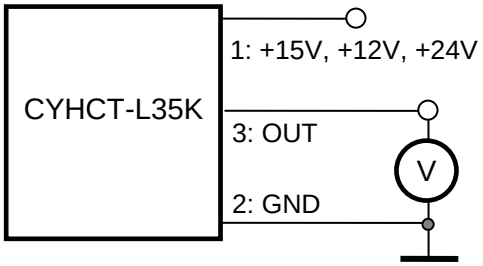

Relation between Input and Output:

Sensor CYHCT-L35K-U100A-34	
Input current (A)	Output voltage (V)
0	0
25	1.25
50	2.5
75	3.75
100	5

1: Power supply; 2: GND; 3: Voltage Output

Wiring of Terminals for Current Output:

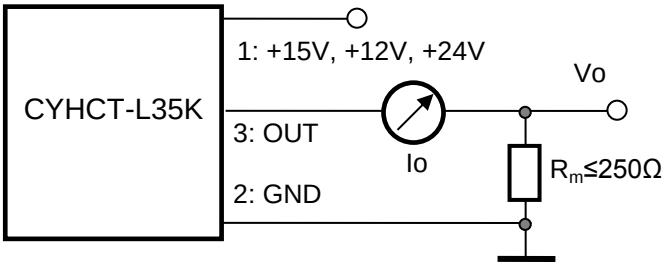

1: Power supply; 2: GND; 3: Current Output

Relation between Input and Output (for R_m=250 Ω):

Sensor CYHCT-L35K-U100A-54		
Input current (A)	Output current Io(mA)	Output voltage Vo (V)
0	4	1
25	8	2
50	12	3
75	16	4
100	20	5

Notes:

1. Connect the terminals of power source, output respectively and correctly, never make wrong connection.
2. Two potentiometers can be adjusted, only if necessary, by turning slowly to the required accuracy with a small screw driver.
3. The best accuracy can be achieved when the window is fully filled with bus-bar (current carrying conductor).
4. The in-phase output can be obtained when the direction of current of current carrying conductor is the same as the direction of arrow marked on the transducer case.

Hall Effect DC Current Sensor CYHCT-D6V

This Hall Effect current sensor is based on open loop principle and designed with a high galvanic isolation between primary conductor and secondary circuit. It can be used for measurement of DC current etc. The output of the transducer reflects the real wave of the current carrying conductor.

Product Characteristics	Applications
• Excellent accuracy • Very good linearity • Less power consumption • Window structure • Electrically isolating the output of the transducer from the current carrying conductor • No insertion loss • Current overload capability	• **Photovoltaic equipment** • Frequency conversion timing equipment • Various power supply • Uninterruptible power supplies (UPS) • Electric welding machines • Transformer substation • Numerical controlled machine tools • Electric powered locomotive • Microcomputer monitoring • Electric power network monitoring

Electrical Data

Primary Nominal DC Current I_r (A)	Measuring Range (A)	DC Output Voltage (V)	Part number
50	0 ~ ±50A	x=0: 0-4V ±1.0% x=3: 0-5V ±1.0% x=8: 0-10V ±1.0%	CYHCT-D6V-U/B50A-xn
100	0 ~ ±100A		CYHCT-D6V-U/B100A-xn
200	0 ~ ±200A		CYHCT-D6V-U/B200A-xn
300	0 ~ ±300A		CYHCT-D6V-U/B300A-xn
400	0 ~ ±400A		CYHCT-D6V-U/B400A-xn
500	0 ~ ±500A		CYHCT-D6V-U/B500A-xn
600	0 ~ ±600A		CYHCT-D6V-U/B600A-xn
700	0 ~ ±700A		CYHCT-D6V-U/B700A-xn
800	0 ~ ±800A		CYHCT-D6V-U/B800A-xn
900	0 ~ ±900A		CYHCT-D6V-U/B900A-xn
1000	0 ~ ±1000A		CYHCT-D6V-U/B1000A-xn

(U: unidirectional input current; B: bidirectional input current, please give U or B in Part number)
(n=2, *Vcc*= +12VDC ±5%; n=3, *Vcc* =+15VDC ±5%; n=4, *Vcc* =+24VDC±5%)

Supply Voltage:	V_{cc}=+12V, +15V, +24V± 5%
Current Consumption	I_c < 25mA
Isolation Voltage	2.5kV, 50/60Hz, 1min
Output Voltage at I_r, T_A=25°C:	V_{out} =0- 4V, 0-5V, 0-10VDC
Output Impedance:	R_{out} < 150Ω
Load Resistor:	R_L > 10kΩ
Accuracy at I_r, T_A=25°C,	X <1.0% FS
Linearity from 0 to I_r, T_A=25°C,	E_L <1.0% FS
Electric Offset Voltage, T_A=25°C,	V_{oe} <50mV
Magnetic Offset Voltage (I_r →0)	V_{om} <±20mV
Thermal Drift of Offset Voltage,	V_{ot} <±1.0mV/°C
Thermal Drift (-10°C to 50°C),	T.C. < ±0.1% /°C
Response Time at 90% of I_P (f=1k Hz)	t_r < 1ms
Frequency Bandwidth (-3dB),	f_b = DC - 20 kHz
Case Material:	PBT

Ambient Operating Temperature,	T_A = -25°C ~ +85°C
Ambient Storage Temperature,	T_S =-40°C ~ +100°C

PIN Definition and Dimensions

CYHCT-D6V-xxxx

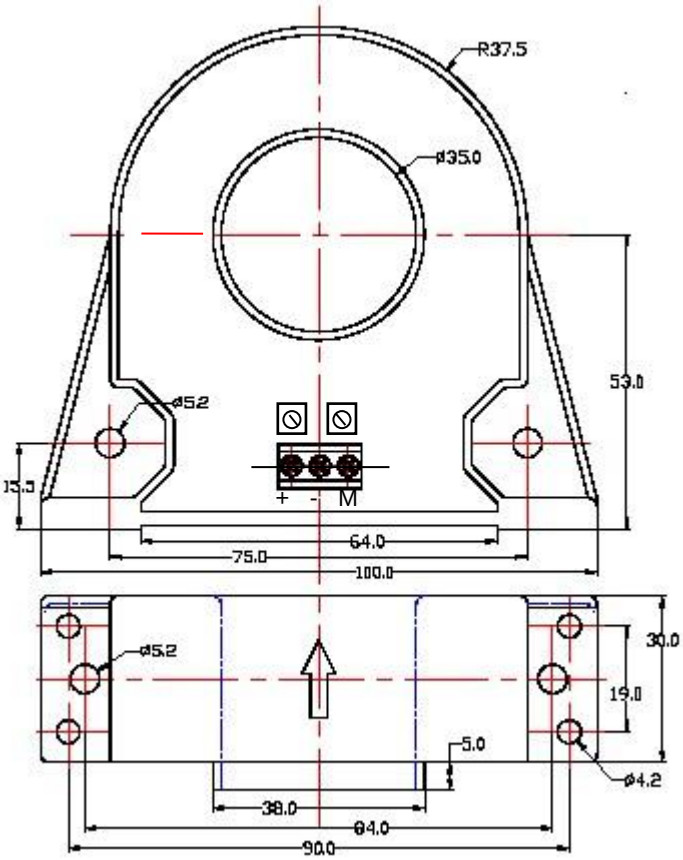

Current direction

Terminal Arrangement

1(+):	Vcc
2(-):	GND
3(M):	Output

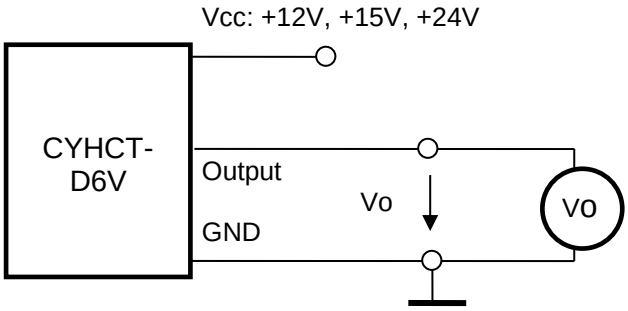

CYHCS-D6V-xxxx

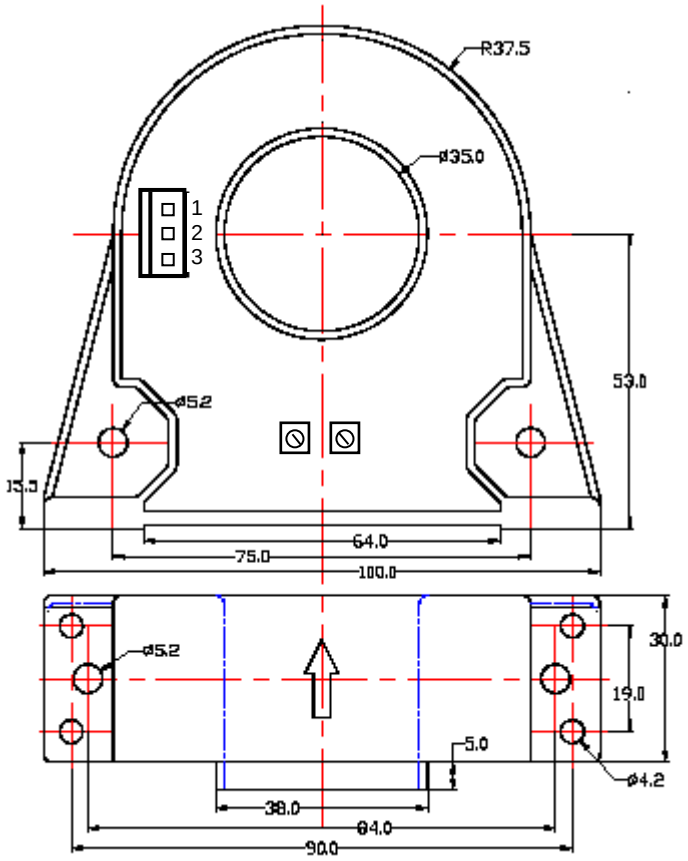

Terminal Arrangement

1: Vcc
2: GND
3: Output

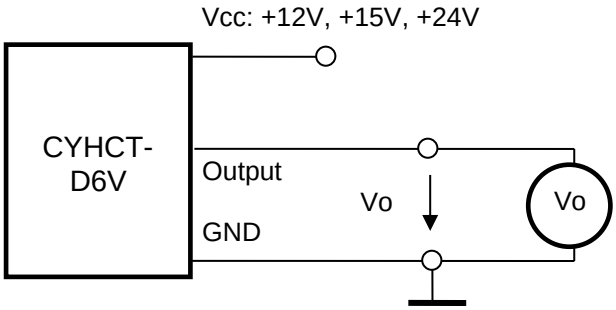

Notes:

1. Connect the terminals of power source, output respectively and correctly, never make wrong connection.
2. Two potentiometers can be adjusted, only if necessary, by turning slowly to the required accuracy with a small screwdriver.
3. The best accuracy can be achieved when the window is fully filled with bus-bar (current carrying conductor).
4. The in-phase output can be obtained when the direction of current of current carrying conductor is the same as the direction of arrow marked on the transducer

Hall Effect DC Current Sensor CYHCT-D6C

This Hall Effect current sensor is based on open loop principle and designed with a solid core and a high galvanic isolation between primary conductor and secondary circuit. It can be used for measurement of DC current etc. The output of the transducer reflects the real wave of the current carrying conductor.

Product Characteristics	Applications
• Excellent accuracy • Very good linearity • Using split cores and easy mounting • Less power consumption • Window structure • Electrically isolating the output of the transducer from the current carrying conductor • No insertion loss • Current overload capability	• **Photovoltaic equipment** • Frequency conversion timing equipment • Various power supply • Uninterruptible power supplies (UPS) • Electric welding machines • Transformer substation • Numerical controlled machine tools • Electric powered locomotive • Microcomputer monitoring • Electric power network monitoring

Electrical Data

Primary Nominal DC Current I_r (A)	Measuring Range (A)	DC Output Current (mA)	Part number
50	0 ~ ±50A	4-20 ±1.0%	CYHCT-D6C-U/B50A-n
100	0 ~ ±100A		CYHCT-D6C-U/B100A-n
200	0 ~ ±200A		CYHCT-D6C-U/B200A-n
300	0 ~ ±300A		CYHCT-D6C-U/B300A-n
400	0 ~ ±400A		CYHCT-D6C-U/B400A-n
500	0 ~ ±500A		CYHCT-D6C-U/B500A-n
600	0 ~ ±600A		CYHCT-D6C-U/B600A-n
700	0 ~ ±700A		CYHCT-D6C-U/B700A-n
800	0 ~ ±800A		CYHCT-D6C-U/B800A-n
900	0 ~ ±900A		CYHCT-D6C-U/B900A-n
1000	0 ~ ±1000A		CYHCT-D6C-U/B1000A-n

(U: unidirectional input current; B: bidirectional input current, please give U or B in Part number)
(n=3, *Vcc*= +12VDC ±5%; n=4, *Vcc* =+15VDC ±5%; n=5, *Vcc* =+24VDC±5%)

Supply Voltage	V_{cc}=+12V, +15V, +24VDC ± 5%
Current Consumption	I_c < 25mA + Output current
Galvanic isolation, 50/60Hz, 1min:	2.5kV
Isolation resistance @ 500 VDC	> 500 MΩ

Accuracy and Dynamic performance data

Accuracy at I_r, T_A=25°C (without offset),	<1.0%
Linearity from 0 to I_r, T_A=25°C,	E_L <1.0% FS
Electric Offset Current, T_A=25°C,	4mA DC or 12mA DC
Thermal Drift of Offset Current,	<±0.005mA/°C
Response Time at 90% of I_P	t_r < 1ms
Load resistance:	80-450Ω
Frequency Bandwidth (-3dB),	f_b = DC - 20 kHz
Case Material:	PBT

General Data

Ambient Operating Temperature,	T_A = -25°C ~ +85°C
Ambient Storage Temperature,	T_S =-40°C ~ +100°C

PIN Definition and Dimensions

CYHCT-D6C-xxxx

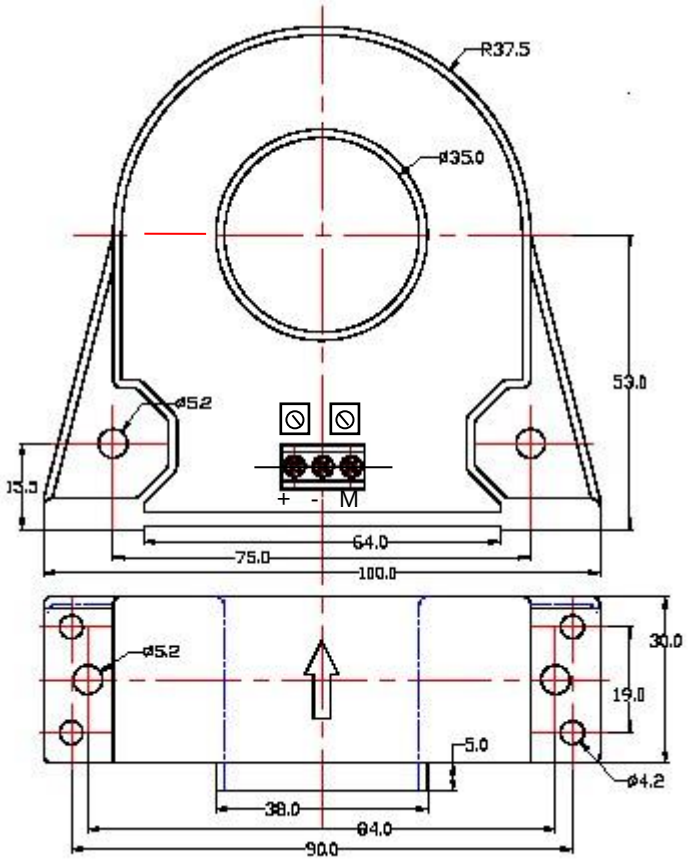

Current direction

Terminal Arrangement

1(+): Vcc
2(-): GND
3(M): Output

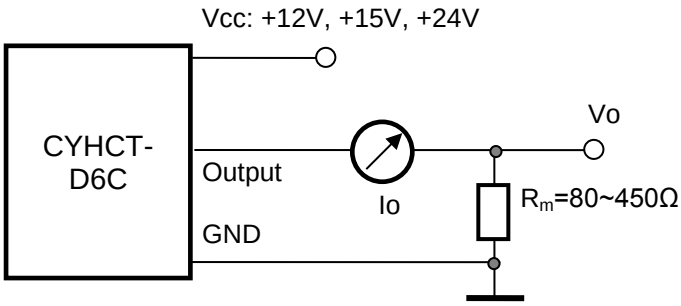

CYHCS-D6C-xxxx

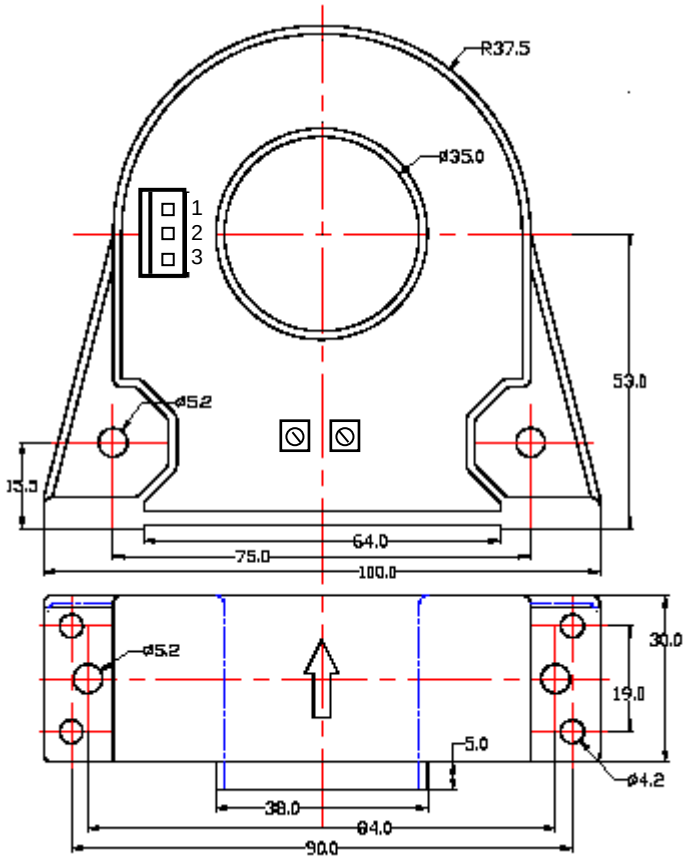

Terminal Arrangement

1: Vcc
2: GND
3: Output

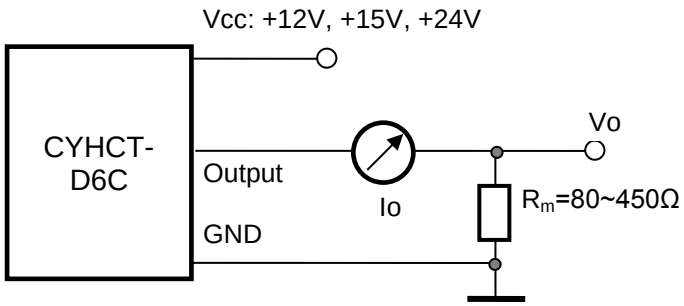

Notes:

1. Connect the terminals of power source, output respectively and correctly, never make wrong connection.
2. Two potentiometers can be adjusted, only if necessary, by turning slowly to the required accuracy with a small screwdriver.
3. The best accuracy can be achieved when the window is fully filled with bus-bar (current carrying conductor).
4. The in-phase output can be obtained when the direction of current of current carrying conductor is the same as the direction of arrow marked on the transducer

Split Core Hall Effect DC Current Sensor CYHCT-C3TV

This Hall Effect current sensor is based on open loop principle and designed with a split core and a high galvanic isolation between primary conductor and secondary circuit. It can be used for measurement of DC current etc. The output of the transducer reflects the real wave of the current carrying conductor.

Product Characteristics	Applications
• Excellent accuracy • Very good linearity • Light in weight • Less power consumption • Window structure • Electrically isolating the output of the transducer from the current carrying conductor • No insertion loss • Current overload capability	• **Photovoltaic equipment** • Frequency conversion timing equipment • Various power supply • Uninterruptible power supplies (UPS) • Electric welding machines • Numerical controlled machine tools • Electrolyzing and electroplating equipment • Electric powered locomotive • Microcomputer monitoring • Electric power network monitoring

Electrical Data/Input

Primary Nominal DC Current I_r (A)	Primary Current Measuring Range I_p(A)	DC Output Voltage (V)	Part number
50A	0 ~ ±50A	x=0: 0-4V ±1.0% x=3: 0-5V ±1.0% x=8: 0-10V ±1.0%	CYHCT-C3TV-U/B50A-xnC
100A	0 ~ ±100A		CYHCT-C3TV-U/B100A-xnC
200A	0 ~ ±200A		CYHCT-C3TV-U/B200A-xnC
300A	0 ~ ±300A		CYHCT-C3TV-U/B300A-xnC
400A	0 ~ ±400A		CYHCT-C3TV-U/B400A-xnC
500A	0 ~ ±500A		CYHCT-C3TV-U/B500A-xnC
800A	0 ~ ±800A		CYHCT-C3TV-U/B800A-xnC
1000A	0 ~ ±1000A		CYHCT-C3TV-U/B1000A-xnC
1500A	0 ~ ±1500A		CYHCT-C3TV-U/B1500A-xnC
2000A	0 ~ ±2000A		CYHCT-C3TV-U/B2000A-xnC

(n=2, *Vcc*= +12VDC; n=3, *Vcc* =+15VDC; n=4, *Vcc* =+24VDC, U: unidirectional, B: bidirectional)
(Connector: Molex connector C=M; Phoenix Connector: C=P)

Supply Voltage:	V_{cc}=+12V, +15V, +24V± 5%
Current Consumption	I_c < 25mA
Isolation Voltage	5kV, 50/60Hz, 1min

Electrical Data/Output

Output Voltage at I_r, T_A=25°C:	V_{out} =0- 4V, 0-5V, 0-10VDC
Output Impedance:	R_{out} < 150Ω
Load Resistor:	R_L > 10kΩ
Accuracy at I_r, T_A=25°C,	X <1.0% FS
Linearity from 0 to I_r, T_A=25°C,	E_L <1.0% FS
Electric Offset Voltage, T_A=25°C,	V_{oe} <50mV
Magnetic Offset Voltage (I_r →0)	V_{om} <±20mV
Thermal Drift of Offset Voltage,	V_{ot} <±1.0mV/°C
Thermal Drift (-10°C to 50°C),	T.C. < ±0.1% /°C
Response Time at 90% of I_P (f=1k Hz)	t_r < 1ms
Frequency Bandwidth (-3dB),	f_b = DC - 20 kHz
Case Material:	PBT

General Data

Ambient Operating Temperature,	T_A = -25°C ~ +85°C
Ambient Storage Temperature,	T_S =-40°C ~ +100°C

PIN Definition and Dimensions

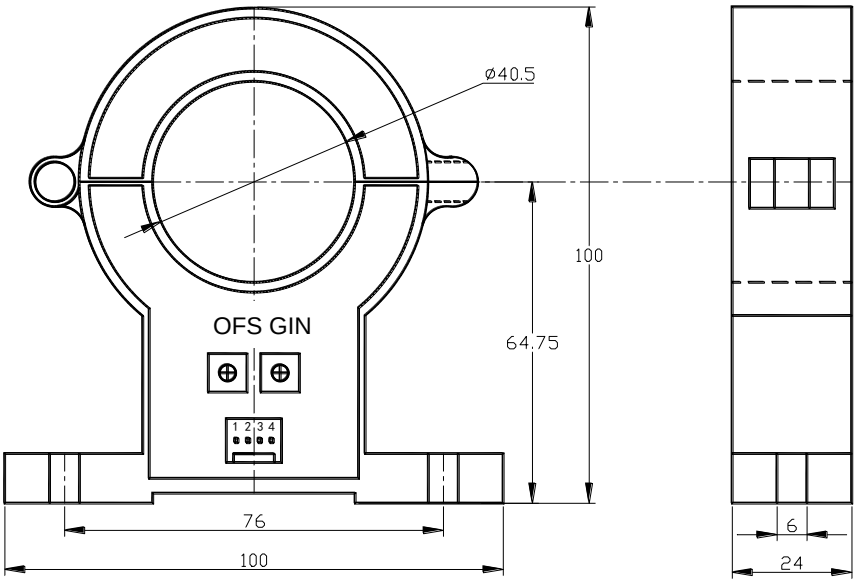

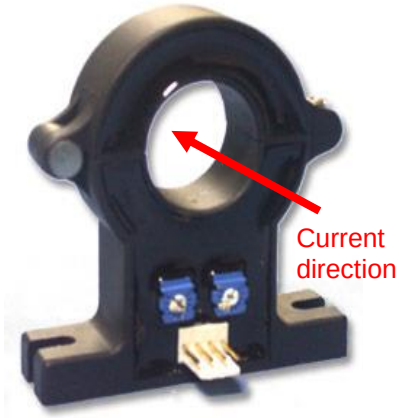

1(+): Vcc
2(G): GND
3(O): Output
4(G): GND

OFS: Offset Adjustment GIN: Gain Adjustment

Connection

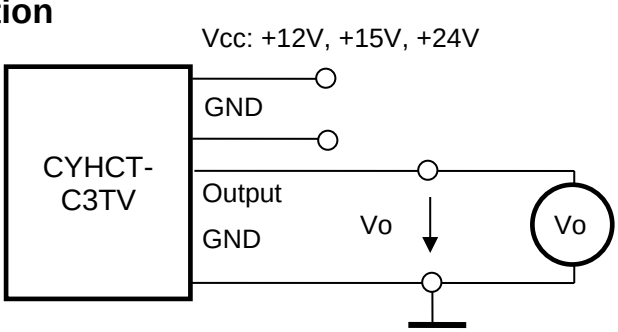

Notes:

1. Connect the terminals of power source, output respectively and correctly, never make wrong connection.
2. Two potentiometers can be adjusted, only if necessary, by turning slowly to the required accuracy with a small screwdriver.
3. The best accuracy can be achieved when the window is fully filled with bus-bar (current carrying conductor).
4. The in-phase output can be obtained when the direction of current of current carrying conductor is the same as the direction of arrow marked on the transducer

Split Core Hall Effect DC Current Sensor CYHCT-C3TC

This Hall Effect current sensor is based on open loop principle and designed with a split core and a high galvanic isolation between primary conductor and secondary circuit. It can be used for measurement of DC current etc. The output of the transducer reflects the real wave of the current carrying conductor.

Product Characteristics	Applications
• Excellent accuracy • Very good linearity • Using split cores and easy mounting • Less power consumption • Window structure • Electrically isolating the output of the transducer from the current carrying conductor • No insertion loss • Current overload capability	• **Photovoltaic equipment** • Frequency conversion timing equipment • Various power supply • Uninterruptible power supplies (UPS) • Electric welding machines • Transformer substation • Numerical controlled machine tools • Electric powered locomotive • Microcomputer monitoring • Electric power network monitoring

Electrical Data

Primary Nominal DC Current I_r (A)	Measuring Range (A)	DC Output Current (mA)	Part number (P/N)
50	0 ~ ±50A	4-20 ±1.0%	CYHCT-C3TC-U/B50A-nC
100	0 ~ ±100A		CYHCT-C3TC-U/B100A-nC
200	0 ~ ±200A		CYHCT-C3TC-U/B200A-nC
300	0 ~ ±300A		CYHCT-C3TC-U/B300A-nC
400	0 ~ ±400A		CYHCT-C3TC-U/B400A-nC
500	0 ~ ±500A		CYHCT-C3TC-U/B500A-nC
800	0 ~ ±800A		CYHCT-C3TC-U/B800A-nC
1000	0 ~ ±1000A		CYHCT-C3TC-U/B1000A-nC
1500	0 ~ ±1500A		CYHCT-C3TC-U/B1500A-nC
2000	0 ~ ±2000A		CYHCT-C3TC-U/B2000A-nC

(U: unidirectional input current; B: bidirectional input current, please give U or B in Part number)
(n=3, *Vcc*= +12VDC ±5%; n=4, *Vcc* =+15VDC ±5%; n=5, *Vcc* =+24VDC±5%)
(Connector: Molex connector C=M; Phoenix Connector: C=P)

Supply Voltage	V_{cc}=+12V, +15V, +24V± 5%
Current Consumption	I_c < 25mA + Output current
Galvanic isolation, 50/60Hz, 1min:	5kV
Isolation resistance @ 500 VDC	> 500 MΩ

Accuracy and Dynamic performance data

Accuracy at I_r, T_A=25°C,	<1.0% FS
Linearity from 0 to I_r, T_A=25°C,	E_L <1.0% FS
Electric Offset Current, T_A=25°C,	4mA DC or 12mA DC
Thermal Drift of Offset Current,	<±0.005mA/°C
Response Time at 90% of I_P	t_r < 1ms
Load resistance:	80-450Ω
Frequency Bandwidth (-3dB),	f_b = DC - 20 kHz
Case Material:	PBT, heat resistant 100°C flame retardant

General Data

Ambient Operating Temperature,	T_A = -25°C ~ +85°C
Ambient Storage Temperature,	T_S =-40°C ~ +100°C

PIN Definition and Dimensions

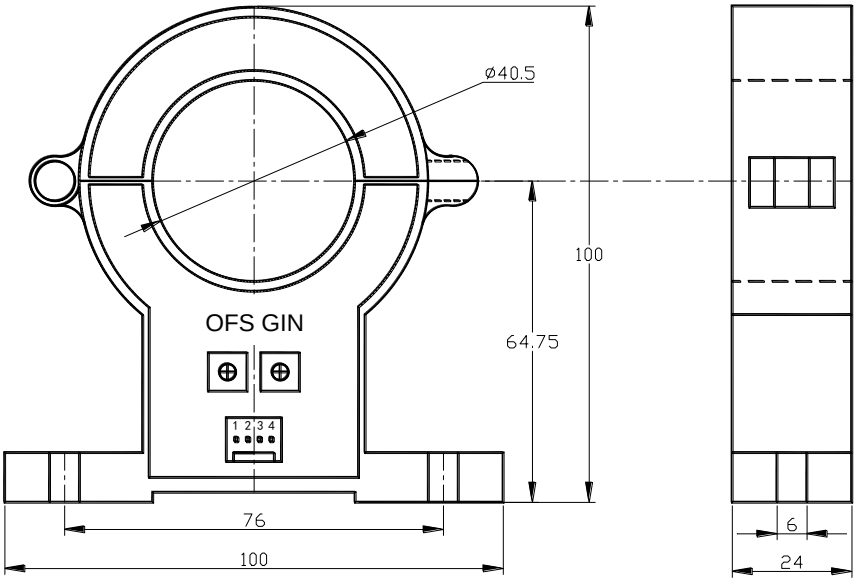

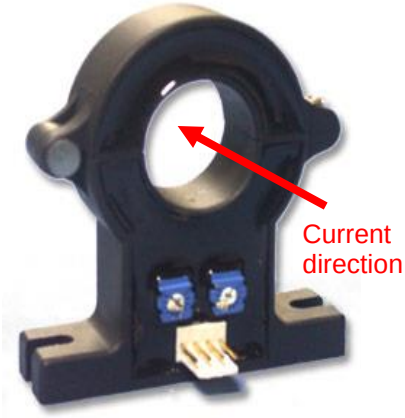

1(+): Vcc
2(G): GND
3(O): Output
4(G): GND

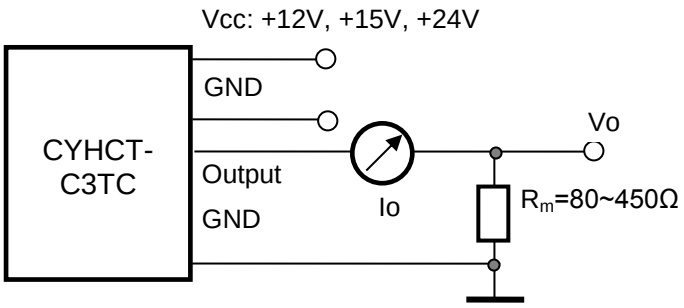

Notes:

1. Connect the terminals of power source, output respectively and correctly, never make wrong connection.
2. Two potentiometers can be adjusted, only if necessary, by turning slowly to the required accuracy with a small screwdriver.
3. The best accuracy can be achieved when the window is fully filled with bus-bar (current carrying conductor).
4. The in-phase output can be obtained when the direction of current of current carrying conductor is the same as the direction of arrow marked on the transducer

Hall Effect DC Current Sensor CYHCT-K2V

This Hall Effect current sensor is based on open loop principle and designed with a high galvanic isolation between primary conductor and secondary circuit. It can be used for measurement of DC current etc. The output of the transducer reflects the real wave of the current carrying conductor.

Product Characteristics	Applications
• Excellent accuracy • Very good linearity • Less power consumption • Window structure • Electrically isolating the output of the transducer from the current carrying conductor • No insertion loss • Current overload capability	• **Photovoltaic equipment** • Frequency conversion timing equipment • Various power supply • Uninterruptible power supplies (UPS) • Electric welding machines • Transformer substation • Numerical controlled machine tools • Electric powered locomotive • Microcomputer monitoring • Electric power network monitoring

Electrical Data

Primary Nominal DC Current I_r (A)	Measuring Range (A)	DC Output Voltage (V)	Part number
300	0 ~ ±300A	x=0: 0-4V ±1.0% x=3: 0-5V ±1.0% x=8: 0-10V ±1.0% (x=8 for for power supply of +15VDC and +24VDC)	CYHCT-K2V-U/B300A-xn
400	0 ~ ±400A		CYHCT-K2V-U/B400A-xn
500	0 ~ ±500A		CYHCT-K2V-U/B500A-xn
600	0 ~ ±600A		CYHCT-K2V-U/B600A-xn
700	0 ~ ±700A		CYHCT-K2V-U/B700A-xn
800	0 ~ ±800A		CYHCT-K2V-U/B800A-xn
900	0 ~ ±900A		CYHCT-K2V-U/B900A-xn
1000	0 ~ ±1000A		CYHCT-K2V-U/B1000A-xn
1100	0 ~ ±1100A		CYHCT-K2V-U/B1100A-xn
1300	0 ~ ±1300A		CYHCT-K2V-U/B1300A-xn
1500	0 ~ ±1500A		CYHCT-K2V-U/B1500A-xn

(U: unidirectional input current; B: bidirectional input current, please give U or B in Part number)
(n=2, *Vcc*= +12VDC ±5%; n=3, *Vcc* =+15VDC ±5%; n=4, *Vcc* =+24VDC±5%)

Supply Voltage:	V_{cc}=+12V, +15V, +24V± 5%
Current Consumption	I_c < 25mA
Isolation Voltage	2.5kV, 50/60Hz, 1min
Output Voltage at I_r, T_A=25°C:	V_{out} =0- 4V, 0-5V, 0-10VDC
Output Impedance:	R_{out} < 150Ω
Load Resistor:	R_L > 20kΩ
Accuracy at I_r, T_A=25°C,	X <1.0% FS
Linearity from 0 to I_r, T_A=25°C,	E_L <1.0% FS
Electric Offset Voltage, T_A=25°C,	V_{oe} <50mV
Magnetic Offset Voltage (I_r →0)	V_{om} <±20mV
Thermal Drift of Offset Voltage,	V_{ot} <±1.0mV/°C
Response Time at 90% of I_P (f=1k Hz)	t_r < 1ms
Frequency Bandwidth (-3dB),	f_b = DC - 20kHz
Case Material:	PBT

Ambient Operating Temperature,	T_A = -25°C ~ +85°C
Ambient Storage Temperature,	T_S =-40°C ~ +100°C

PIN Definition and Dimensions

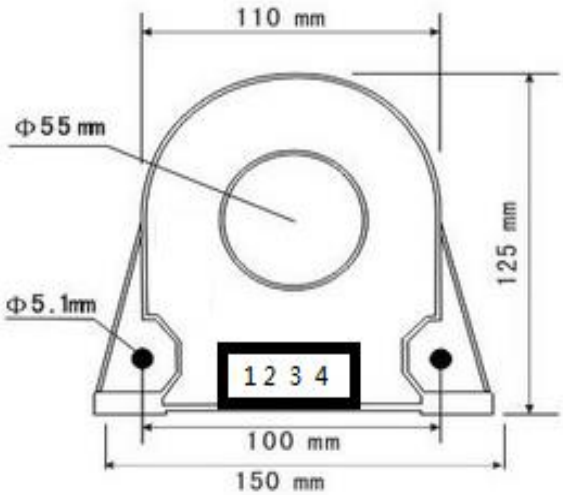

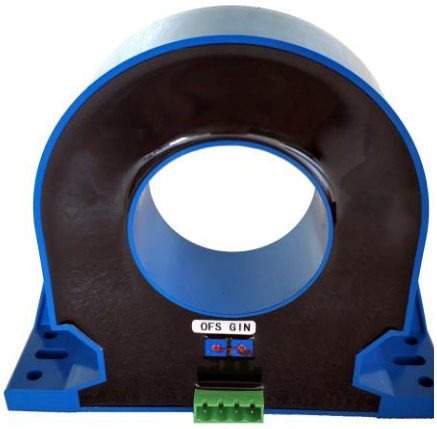

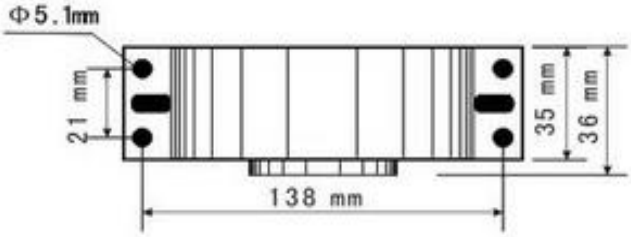

Terminal Arrangement:

1: Vcc (+12, +15V, +24VDC)
2: NC (not connect)
3: OUTPUT
4: GND

OFS: Offset adjustment
GIN: Gain adjustment

Connection

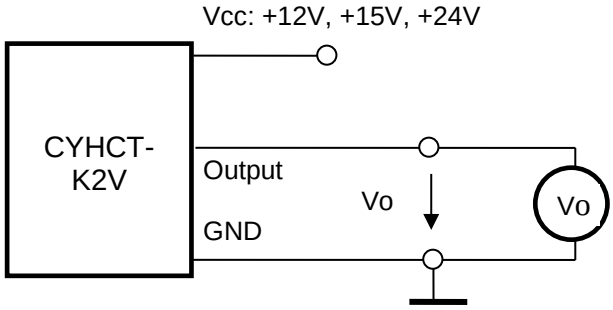

Notes:

1. Connect the terminals of power source, output respectively and correctly, never make wrong connection.
2. Two potentiometers can be adjusted, only if necessary, by turning slowly to the required accuracy with a small screwdriver.
3. The best accuracy can be achieved when the window is fully filled with bus-bar (current carrying conductor).
4. The in-phase output can be obtained when the direction of current of current carrying conductor is the same as the direction of arrow marked on the transducer

Hall Effect DC Current Sensor CYHCT-K2C

This Hall Effect current sensor is based on open loop principle and designed with a solid core and a high galvanic isolation between primary conductor and secondary circuit. It can be used for measurement of DC current etc. The output of the transducer reflects the real wave of the current carrying conductor.

Product Characteristics	Applications
• Excellent accuracy • Very good linearity • Using split cores and easy mounting • Less power consumption • Window structure • Electrically isolating the output of the transducer from the current carrying conductor • No insertion loss • Current overload capability	• **Photovoltaic equipment** • Frequency conversion timing equipment • Various power supply • Uninterruptible power supplies (UPS) • Electric welding machines • Transformer substation • Numerical controlled machine tools • Electric powered locomotive • Microcomputer monitoring • Electric power network monitoring

Electrical Data

Primary Nominal DC Current I_r (A)	Measuring Range (A)	DC Output Current (mA)	Part number
300	0 ~ ±300A	4-20 ±1.0%	CYHCT-K2C-U/B300A-xn
400	0 ~ ±400A		CYHCT-K2C-U/B400A-xn
500	0 ~ ±500A		CYHCT-K2C-U/B500A-xn
600	0 ~ ±600A		CYHCT-K2C-U/B600A-xn
700	0 ~ ±700A		CYHCT-K2C-U/B700A-xn
800	0 ~ ±800A		CYHCT-K2C-U/B800A-xn
900	0 ~ ±900A		CYHCT-K2C-U/B900A-xn
1000	0 ~ ±1000A		CYHCT-K2C-U/B1000A-xn
1100	0 ~ ±1100A		CYHCT-K2C-U/B1100A-xn
1300	0 ~ ±1300A		CYHCT-K2C-U/B1300A-xn
1500	0 ~ ±1500A		CYHCT-K2C-U/B1500A-xn

(U: unidirectional input current; B: bidirectional input current, please give U or B in Part number)
(n=3, *Vcc*= +12VDC ±5%; n=4, *Vcc* =+15VDC ±5%; n=5, *Vcc* =+24VDC±5%)

Supply Voltage	V_{cc}=+12V, +15V, +24VDC ± 5%
Current Consumption	I_c < 25mA + Output current
Galvanic isolation, 50/60Hz, 1min:	2.5kV
Isolation resistance @ 500 VDC	> 500 MΩ

Accuracy and Dynamic performance data

Accuracy at I_r, T_A=25°C (without offset),	<1.0%
Linearity from 0 to I_r, T_A=25°C,	E_L <1.0% FS
Electric Offset Current, T_A=25°C,	4mA DC or 12mA DC
Thermal Drift of Offset Current,	<±0.005mA/°C
Response Time at 90% of I_P	t_r < 1ms
Load resistance:	80-250Ω
Frequency Bandwidth (-3dB),	f_b = DC - 20 kHz
Case Material:	PBT

General Data

Ambient Operating Temperature,	T_A = -25°C ~ +85°C
Ambient Storage Temperature,	T_S =-40°C ~ +100°C

PIN Definition and Dimensions

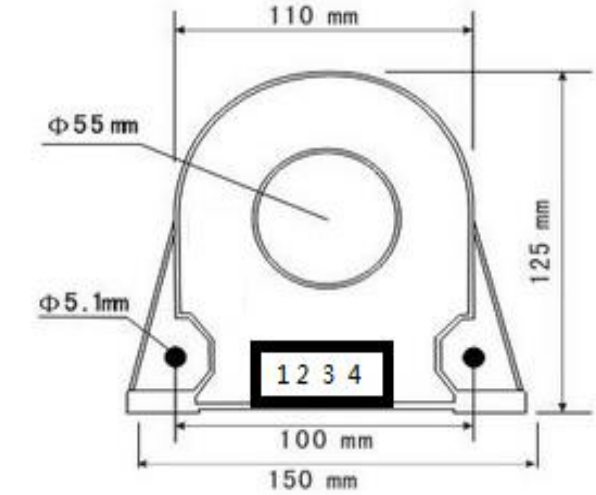

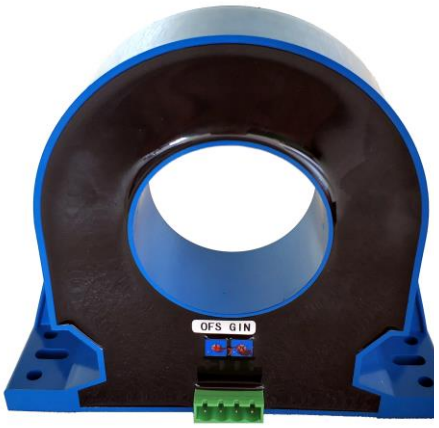

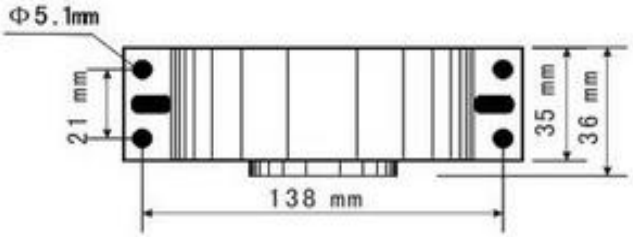

Terminal Arrangement:

1: Vcc (+12, +15V, +24VDC)
2: NC (not connect)
3: OUTPUT
4: GND

OFS: Offset adjustment
GIN: Gain adjustment

Connection

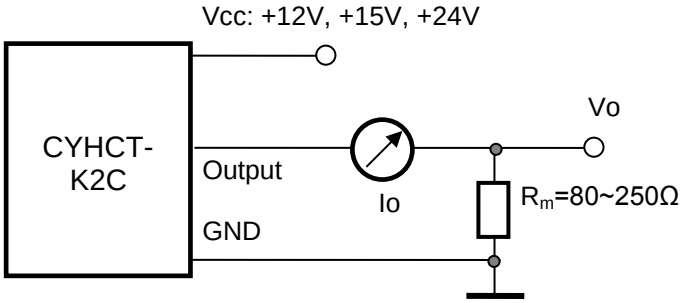

Notes:

1. Connect the terminals of power source, output respectively and correctly, never make wrong connection.
2. Two potentiometers can be adjusted, only if necessary, by turning slowly to the required accuracy with a small screwdriver.
3. The best accuracy can be achieved when the window is fully filled with bus-bar (current carrying conductor).
4. The in-phase output can be obtained when the direction of current of current carrying conductor is the same as the direction of arrow marked on the transducer